BALLUFF

sensors worldwide

reddot design award
winner 2012

Products + News

Products + News | Superior quality for efficient automation +++ Service | Customized. According to your specifications. In the best quality. +++ Micropulse transducers redundant rod series | Secure and compact +++ BIS V industrial RFID system | The new generation for more efficiency +++ and much more ...

With over 50 years of sensor experience, Balluff is a leading global sensor specialist with its own line of connectivity products for every area of factory automation. Balluff is based in Germany and has a tight international network of 54 representatives and subsidiaries.

Balluff stands for comprehensive systems from a single source, continuous innovation, state-of-the-art technology, highest quality and greatest reliability and prides itself on distinctive customer orientation, customized solutions, fast worldwide service and outstanding application assistance.

Object Detection

14 Ultra-high temperature-resistant multiple and single position switches BNS
16 BES inductive sensors, 8×8 mm shorties
18 Pressure-resistant inductive mini sensors, 100 bars
20 Weld immune factor 1+ sensors
22 Ultra-high-temperature resistant inductive sensors
24 New inductive Proxinox sensors for the food industry
26 Inductive Q40 block sensors with corner LEDs
28 BES IKVS inductive ring sensors
30 BES Z06K inductive tube sensors
32 Reliable transparency detection with laser fork sensors BGL
34 Reliable web edge control – BGL analog fork sensors
36 Red light and laser through-beam sensors BOS Q08M
38 BOS Q08M diffuse sensor with fixed background suppression
40 Photoelectric sensors M18 with background suppression
42 M18 photoelectric sensors – BOS 18M GlobalProx
44 M18 photoelectric red light sensors
46 M18 photoelectric sensors – BOS 18M, infrared
48 BOS 18M photoelectric sensor with additional diagnostics – teach-in
50 BOS M18 photoelectric sensors – BOS 18M diffuse sensor infrared for glass detection
52 New BOS 23K photoelectric sensors
54 BOS 50K photoelectric sensors
56 BFS 33M true-color sensor
58 Cylindrical magnetic field sensors for large operating ranges
60 BMF 255 magnetic ATEX cylindrical sensor
62 BMF 235 sensors for pneumatic cylinders
64 Cylindrical magnetic field sensors with mounting system
66 Service case for position detection at the pneumatic cylinder
68 Capacitive GlobalProx sensors in 40×40 mm size
70 BCS capacitive mini sensors
74 New: Steelface ultrasonic sensors

Linear Position Sensing

78 High-pressure resistant inductive sensors up to 500 bars
80 BIP inductive positioning system
84 BML-S1H magnetically coded position and angle measurement system
86 Micropulse redundant rod transducers
88 BTL5-CD micropulse transducers
90 BTL ProCompact micropulse transducers
92 BTL7 compact micropulse transducers
94 BTL AR ZA0 micropulse transducers

Products + **News**

Top quality for efficient automation

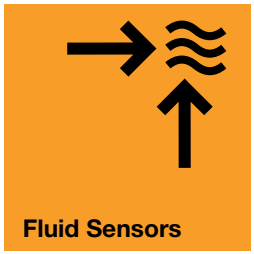

Fluid Sensors

98 BSP standard pressure sensors
100 BSP high-end pressure sensors
102 40×40 mm SMART*LEVEL* BCS capacitive sensors
104 SMART*LEVEL* 500+ capacitive sensors
106 Fork sensors for fluid detection
108 BTL-SF micropulse filling level sensor

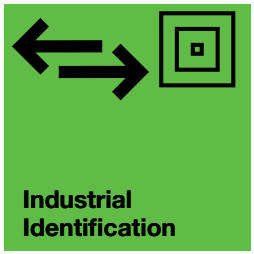

Industrial Identification

112 BVS-E identification vision sensors
114 BVS-E vision sensor monitor
116 IP 67+ degree of protection inexpensive retrofit
118 Balluff Added Value Kits for BVS vision sensors
120 Spotlights with IP 67 degree of protection
122 Extremely flat infrared background lights
124 Why RFID from Balluff? – Comprehensive systems expertise
126 Optimal integration of industrial RFID systems
128 Protecting products and expertise
130 Industrial RFID system BIS V – the new generation for more efficiency
136 A powerful high-frequency package ensures maximum transparency
138 Industrial RFID in transfer systems
140 Evaluation unit with CC-Link for 13.56 MHz
142 Evaluation unit for Mitsubishi controller
144 HF data screw BIS M – better safe than sorry

Industrial Networking and Connectivity

148 IO-Link – network technology for reliable data transfer and more efficiency
150 IO-Link – M12 metal sensor hubs, 16 binary inputs/outputs
152 IO-Link – metal M12 sensor/actuator hubs, single-channel monitoring
154 IO-Link – metal M12 actuator hubs, single-channel monitoring
156 IO-Link – sensor/ actuator hubs, IP 20
158 IO-Link – analog adapter
160 CC-Link – high-performance products from a single source
162 Ethernet – innovations from Balluff
164 Profinet – Profinet Gen II
166 Profibus – Profibus Gen II
168 Web server – Ethernet/IP Gen IV and Profinet Gen II
170 Ethernet TCP/IP switch
172 BPI passive splitter boxes, 4-pin
174 BPI passive splitter boxes, 5-pin
176 BCC connectors for temperatures up to 120 °C
178 Weld spatter-resistant PUR lines
186 Dynamic sensor control – condition monitoring
196 Inductive couplers – IO-Link, unidirectional
198 Inductive couplers – power-only
200 Inductive couplers – Uni-Standard and IO-Link
202 Power supplies

Accessories

208 Balluff protection cap for ultrasonic sensors
210 Clamping holder overview – 65 clamping holder versions
212 Contact protector and tube switch

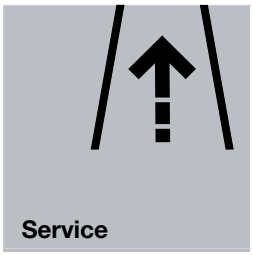

Service

216 Service – Customized. According to your specifications. In the best quality.

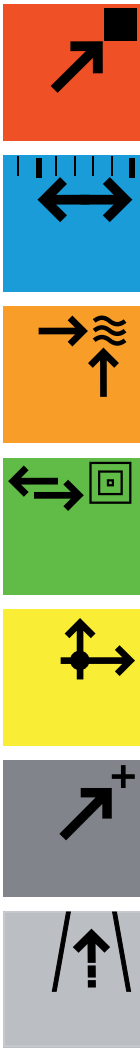

New

M18 photoelectric sensors

Infrared diffuse sensor – especially for glass detection

The detection of glass always poses a special challenge for photoelectric sensors. Often, a retroreflective sensor cannot be installed, so detection by means of a diffuse sensor is the only option. Balluff provides...

cont. on page 50

BMF 255 magnetic ATEX cylindrical sensor

Flexible, simple, secure

Balluff is expanding its portfolio of magnetic cylindrical sensors by adding the ATEX area. In particular, areas with continuous, long-term and frequent occurrences of dust, gases and vapors (Zone 0/20, category 1G/1D) are covered...

cont. on page 60

BCS capacitive sensors

GlobalProx sensors in 40×40 mm size

The new BCS Uniflat capacitive sensors of the GlobalProx series provide very good performance with a switching distance of up to 20 mm in the compact plastic housing. With a well-conceived fastening design, they can be screwed on...

cont. on page 68

Product highlights
An overview

BML-S1H magnetically coded position and angle measurement system

Absolute precision

Inaccuracy and tolerance shifts have a negative effect on production quality. The solution: direct measuring systems detect the current position directly on the carriage or the load support.
The new magnetically coded position and angle measurement system...

cont. on page 84

Micropulse transducers redundant rod series

Secure and compact

BTL7 redundant micropulse transducers
The robust position measuring system for use in safety-related valves and hydraulic cylinders for measuring areas between 25 and 7620 mm...

cont. on page 86

BCS capacitive sensors

The 40×40 mm sensor – also available as SmartLevel

The new capacitive SmartLevel sensors in the Uniflat design detect conductive media through non-metallic container walls with a thickness up to 10 mm extremely reliably.
With a well-conceived...

cont. on page 102

New

BIS V industrial RFID system

The new generation for more efficiency

Make quick, contactless data communication noticeably more efficient with the BIS V industrial RFID system from Balluff. Only BIS V from Balluff combines RFID and sensors. BIS V, along with the four antenna channels, has an integrated IO-Link master...

cont. on page 130

Profinet

Profinet Gen II

Profinet is increasingly becoming the communications medium of the future for mechanical and plant engineering. In some areas, it has already incrementally replaced the Profibus. Profinet has for a long time been a globally recognized standard...

cont. on page 164

Profibus

Profibus Gen II

As a full-service provider, Balluff offers a wide range of components for optimum Profibus use. Regardless of controller manufacturer, Balluff has the perfect...

cont. on page 166

Product highlights
An overview

Ethernet

TCP/IP 5-port switch

Ethernet-based network systems are gaining more and more importance in industrial automation...

cont. on page 170

Services

Customized. According to your specifications. In the best quality.

We give you comprehensive service over the entire life cycle of our products: including the conception and planning of your projects, testing and setup on site, and training and support. For an optimal implementation. Completely according to...

cont. on page 216

Object Detection
Linear Position Sensing
Fluid Sensors
Accessories

Inductive sensors BES, cylinder sensors BMF, magnetic field sensors BMF, photoelectric sensors BOS, capacitive sensors BCS for object detection, ultrasonic sensors BUS for object detection, fiber optic devices BFB, through-beam fork sensors BGL, optical window sensors BOW, light grids BLG, contrast sensors BKT, luminescence sensors BLT, color sensors BFS, mechanical and inductive single and multiple position switches BNS, micropulse transducers BTL, magnetically coded position and angle measurement system BML, incremental encoders BDG, absolute encoders BRG, inductive displacement system BIW, inductive distance sensors BAW, magnetoinductive distance sensors BIL, capacitive distance sensors BCW, photoelectric distance sensors BOD, ultrasonic sensors BUS for analog distance measurement, pressure sensors BSP, capacitive sensors BCS for level detection, brackets and mountings, mounting system BMS

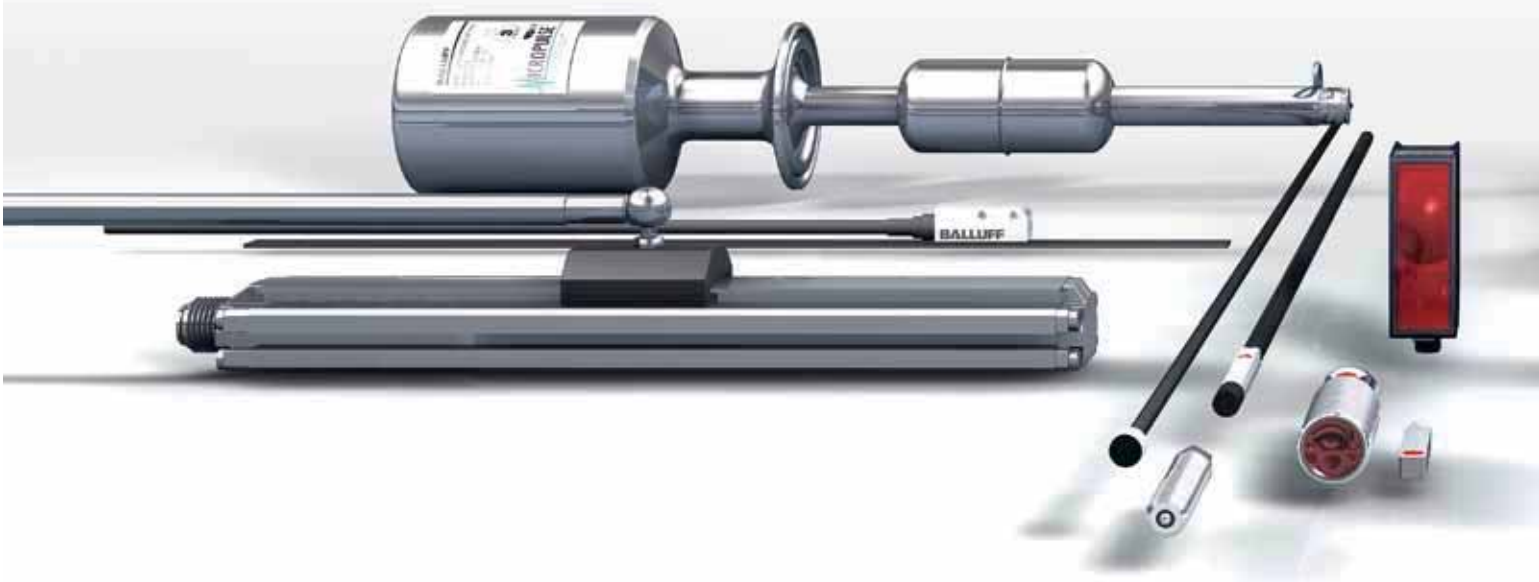

Sensors and Solutions

Balluff has the right products for every application area

IO-Link
BALLUFF

Industrial Identification Industrial Networking and Connectivity

Industrial RFID systems BIS, Vision Sensors BVS, connectors and connection cables BCC, valve connectors BCC, passive splitter boxes BPI, active splitter boxes BNI, IO-Link, inductive couplers BIC, bus systems (Profibus, Profinet, CC-Link, Devicenet, Ethernet, IO-Link), wireless systems BWT, power supplies BAE, electrical equipment BAE

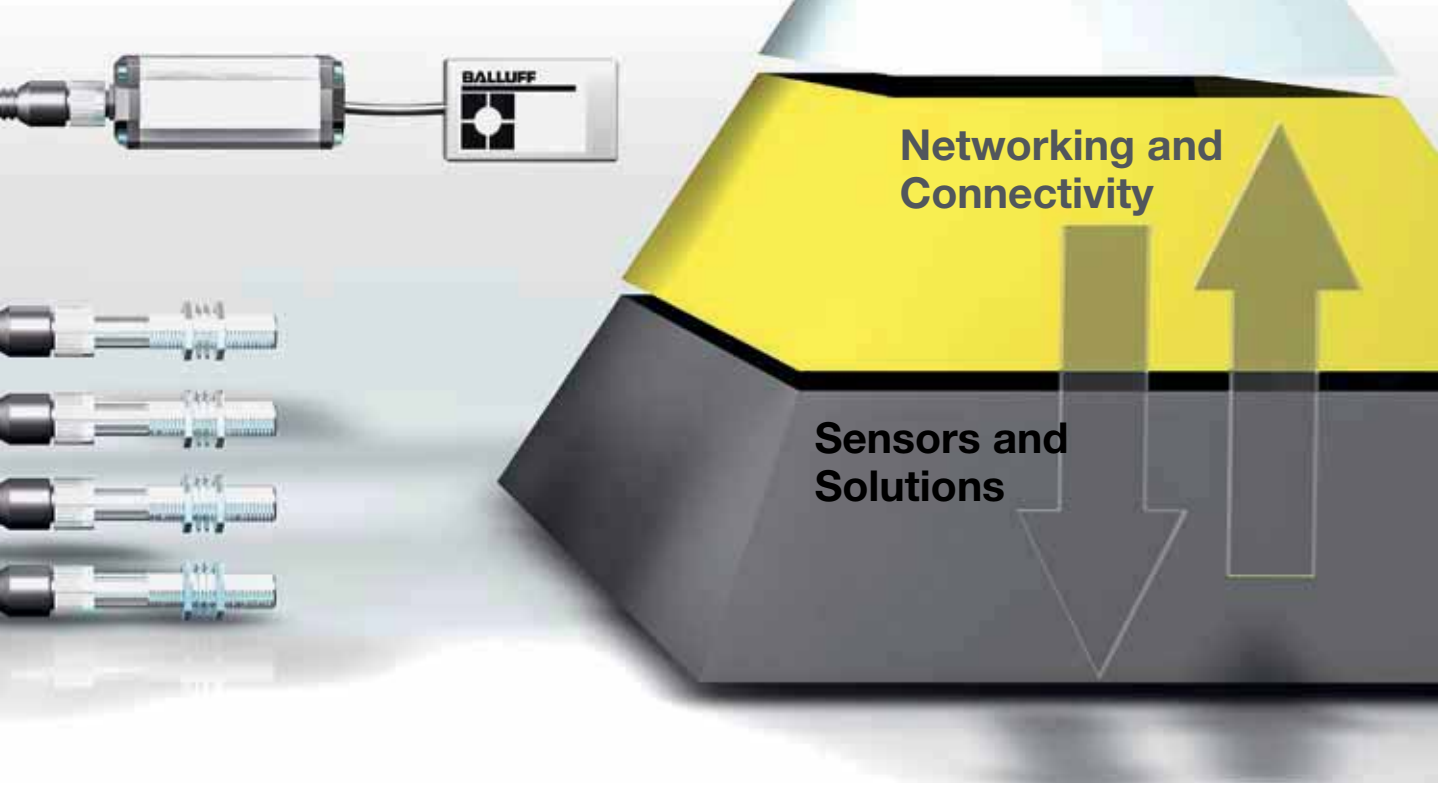

Object Detection

Mechanical Multiple Position Switches
Inductive Sensors
Photoelectric Sensors
Sensors for Pneumatic Cylinders
Capacitive Sensors
Ultrasonic Sensors

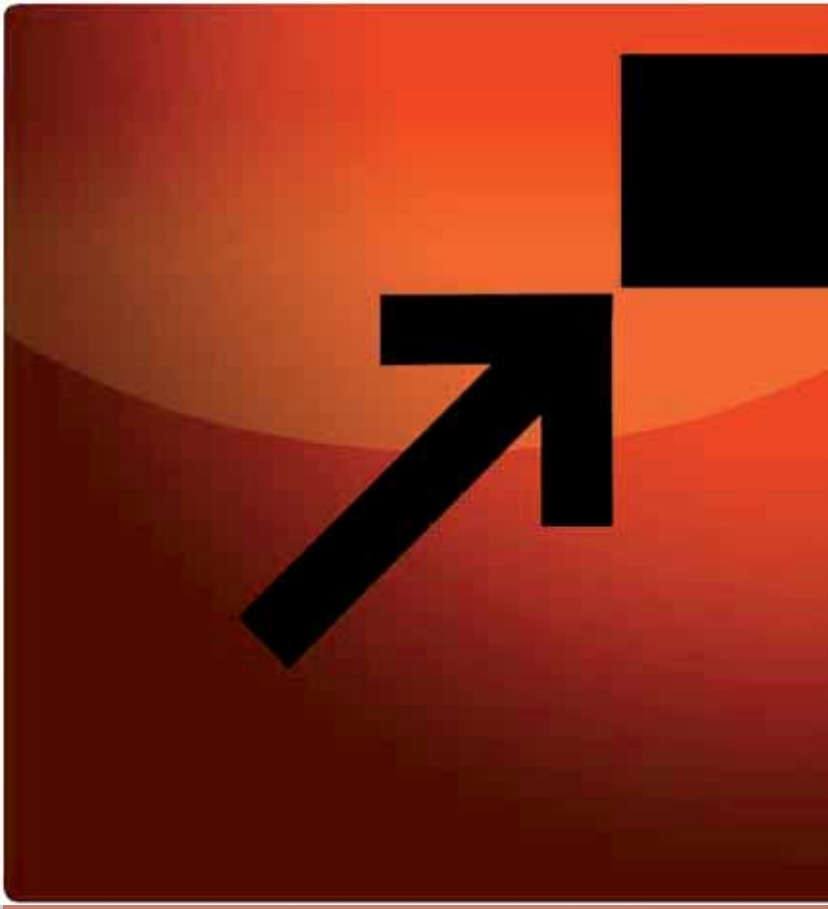

more added value

Stays cool, even when things get hot
The ultra-high temperature-proof multiple and single position switches can be used for temperatures up to 180 °C, require little space and feature a robust die casting housing. They are the perfect solution for harsh environments in die construction, plastic and steel industry.

Switch element BSE 79

Series 46

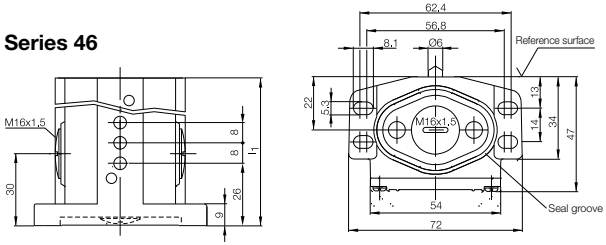

Available sizes

Number of plungers	2	3
Dimension l_1	49 mm	59 mm

Series 40

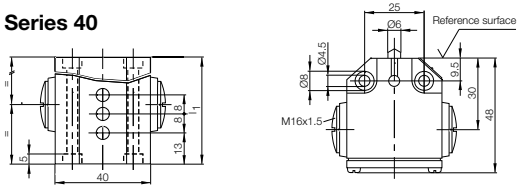

Available sizes

Number of plungers	2	3
Dimension l_1	49 mm	59 mm

Series 99

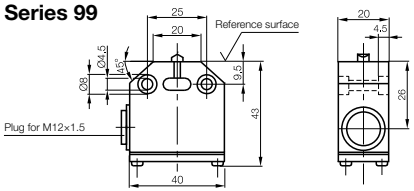

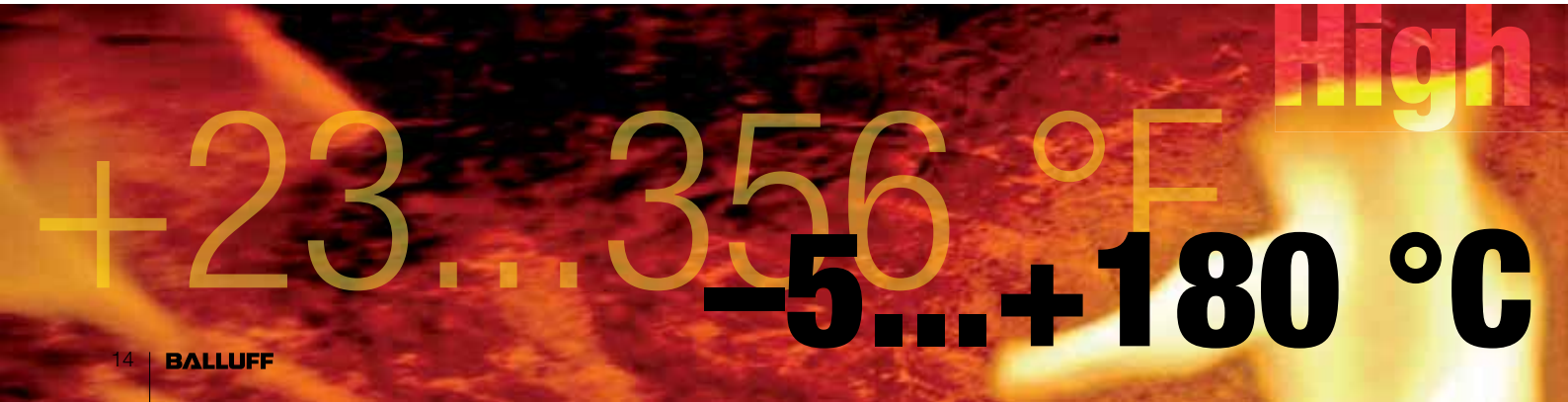

For Extreme Applications up to +180 °C

Ultra-high temperature-resistant multiple and single position switches BNS

Ordering example:
BNS 819-B03-D08-46-15

BNS 819-B_ _-_ 08-_ _-15

No. of plungers	Plunger style	Model
02 2×	**D** Chisel	**40**
03 3×	**K** Ball	**46**
	R Roller	

Ordering example:
BNS 819-99-D-15

BNS 819-99-_ 15

Plunger style
D Chisel
K Ball
R Roller

Type	Multiple and single position switches, 40, 46 and 99 series
Plunger spacing	8/10 mm
Plunger style	Chisel (**D**), Ball (**K**), Roller (**R**)
Plunger material	Stainless steel, contact surfaces induction-hardened
Housing material	Cast aluminum, corrosion-resistant, anodized finish
Connection type	M12×1.5 or M16×1.5 for bulkhead
Ambient temperature range	–5...150 °C (–5...180 °C 10 h/day) +23...302 °F (+23...356 °F 10 h/day)
Degree of protection per IEC 60529	IP 67

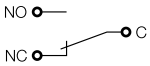

Switching element	**BSE 79**
Part number	BNS 819-...-46-15
Contact material	Gold
Switching principle	Snap switch
Contact system	Single-pin changeover
Connection type	Solder connection
Approval	UL, CE, CSA, CCC, ENEC
Plunger point to reference surface	4 mm
Switching point to reference surface	3.5 mm
Maximum plunger travel	3.5 mm
Switching actuating force on plunger	Min. 8 N

Additional types on request
Ultra-BNS@balluff.de or from your Balluff Field Service Specialist.

Assembly

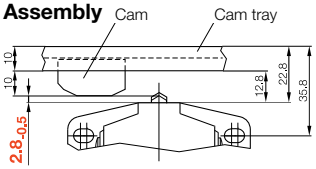

Important!
To ensure switching function, the dimension $2.8_{-0.5}$ is especially critical.

more added value

- Thanks to the miniature frame size, position sensing is now also possible where there was never before space for a sensor
- Assemblies can be shrunk even further, since the sensors require less space
- Ideal price/performance ratio
- Robust through high-quality metal enclosure
- High functional reserve through increased switching distance

Size		
Mounting type		
Rated switching distance s_n		
Switching distance identification		
PNP, NO	**Ordering code**	
	Part number	
Operating voltage U_B		
Rated operating current I_e		
Reverse polarity/short-circuit protected		
Function indicator		
Ambient temperature range		
Switching frequency f		
Degree of protection per IEC 60529		
Approvals		
Housing material		
Material of sensing face		
Connection		

For installation instructions and connection circuit diagrams, see the catalog "Object Detection – Inductive sensors".

Common application examples

- Linear units
- Robotics and automation
- Vibrating conveyor

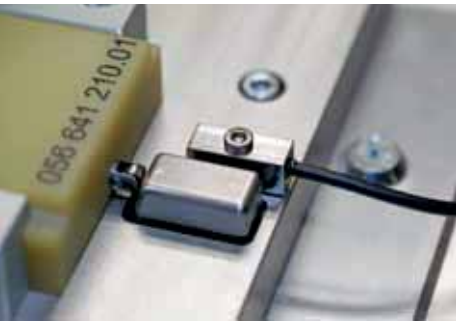

Inductive Sensors BES 8×8 mm Shorties

The sensors with the dream dimensions

8×27×8 mm	**8×24×8 mm**	**8×20×8 mm**	**8×20×8 mm**	**8×20×8 mm**
Flush	Flush	Flush	Flush	Flush
2 mm	**2 mm**	**2 mm**	**2 mm**	**2 mm**
■■	■■	■■	■■	■■
BES03Y8	**BES03U4**	**BES041N**	**BES041U**	**BES03U2**
BES Q08MEC-PSC20B-S49G	BES Q08MEC-PSC20B-S26G	BES Q08MEC-PSC20B-EP00,3-GS49	BES Q08MEC-PSC20B-EP00,3-GS26	BES Q08MEC-PSC20B-EP02
10...30 V DC	10...30 V DC	10...30 V DC	10...30 V DC	10...30 V DC
200 mA	200 mA	200 mA	200 mA	200 mA
Yes/yes	Yes/yes	Yes/yes	Yes/yes	Yes/yes
Yes	Yes	Yes	Yes	Yes
–25...+70 °C	–25...+70 °C	–25...+70 °C	–25...+70 °C	–25...+70 °C
3000 Hz	3000 Hz	3000 Hz	3000 Hz	3000 Hz
IP 67	IP 67	IP 67	IP 67	IP 67
CE, cULus	CE, cULus	CE, cULus	CE, cULus	CE, cULus
Brass-coated	Brass-coated	Brass-coated	Brass-coated	Brass-coated
PBT	PBT	PBT	PBT	PBT
M8 connector, 3-pin	M5 connector, 3-pin	0.3 m cable PUR with M8 connector, 3-pin	0.3 m cable PUR with M5 connector, 3-pin	2 m cable PUR, 3×0.14 mm²

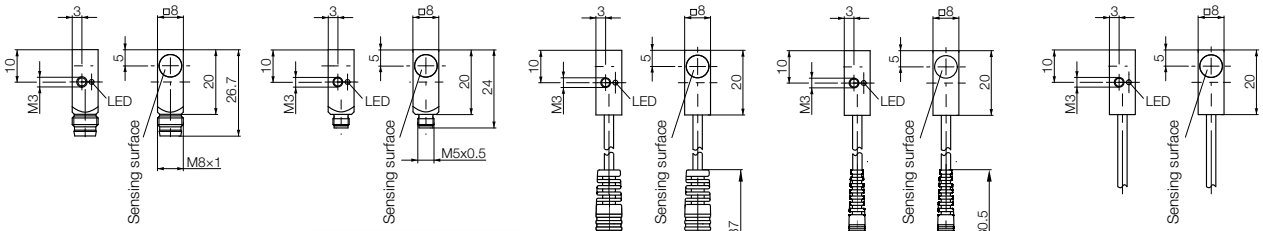

A large selection of plug connectors and connecting cables in different cable materials and lengths can be found in our catalog Industrial Networking and Connectivity.

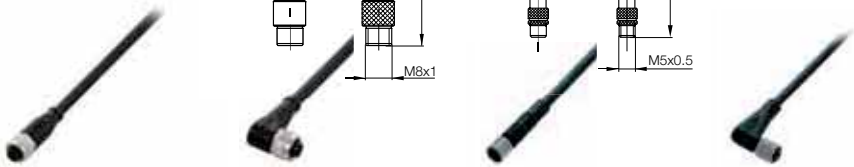

Connector		**M8 × 1**	**M8 × 1**	**M5×0.5**	**M5×0.5**
Type		Straight female	Right angle female	Straight female	Right angle female
Cable length/material		2 m PUR	2 m PUR	3 m PUR	3 m PUR
No LED	**Ordering code**	**BCC02NU**	**BCC02P5**	**BCC00HE**	**BCC00HM**
	Part number	BCC M313-0000-10-001-VX8334-020	BCC M323-0000-10-001-VX8334-020	BKS-B 25-1-PU-03	BKS-B 25-1-PU-03

more added value

- Mini design M5
- For pressure-resistant applications up to 100 bar
- Ideal price/performance ratio

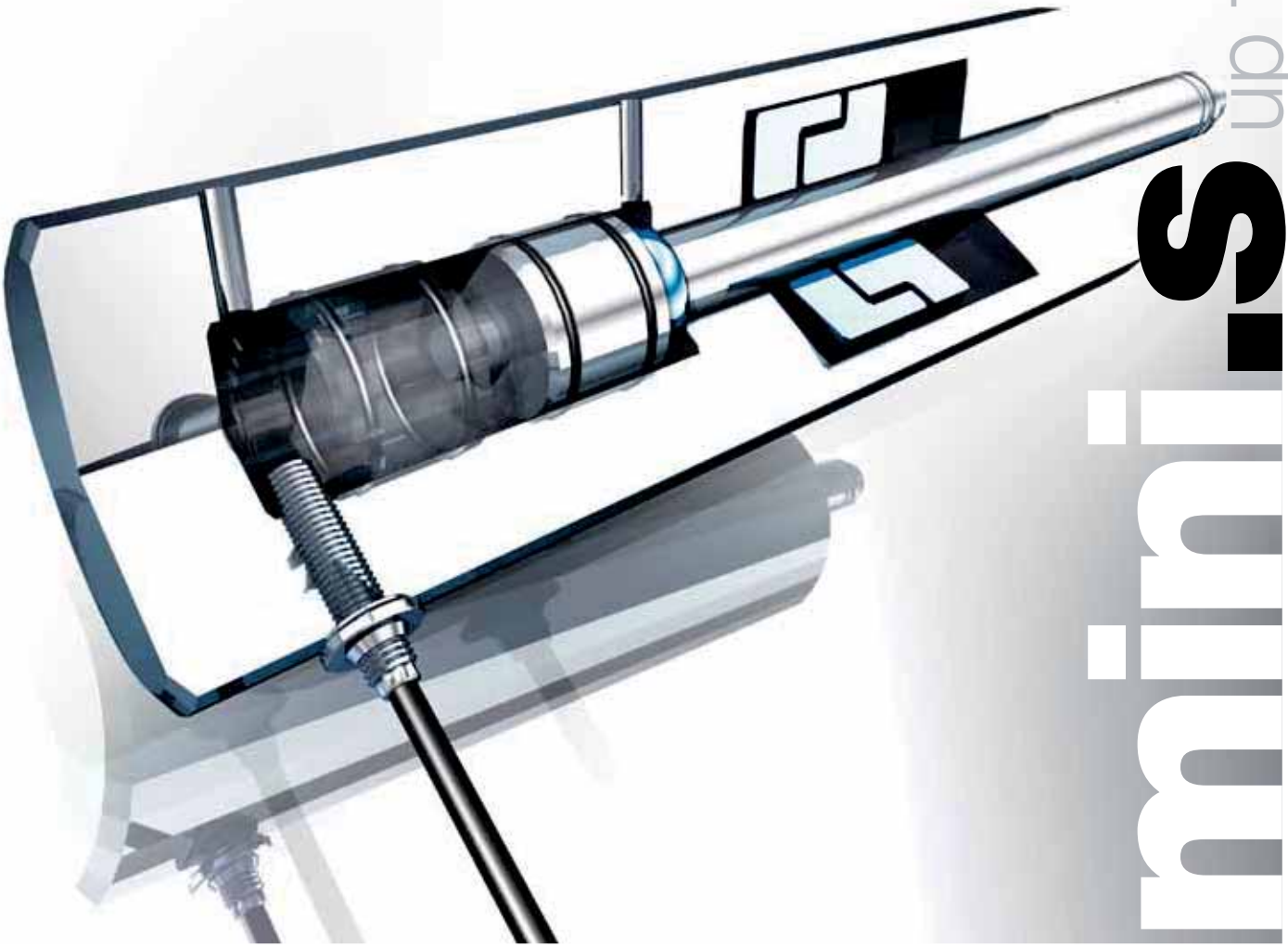

mini.S up to 100 bar

Pressure-resistant Inductive Mini Sensors

Powerful M5 sensors up to 100 bar

Size			**M5×0.5**	**M5×0.5**
Mounting type			Flush	Flush
Rated switching distance s_n			**0.8 mm**	**0.8 mm**
PNP	NO	**Ordering code**	**BES03LC**	**BES03L7**
		Part number	BES M05ED-PSD08B-BP00.3-GS49-R03	BES M05ED-PSD08B-BP02-R03
	NC	**Ordering code**	**BES03LE**	**BES03L8**
		Part number	BES M05ED-POD08B-BP00.3-GS49-R03	BES M05ED-POD08B-BP02-R03
NPN	NO	**Ordering code**	**BES03LF**	**BES03L9**
		Part number	BES M05ED-NSD08B-BP00.3-GS49-R03	BES M05ED-NSD08B-BP02-R03
	NC	**Ordering code**	**BES03LH**	**BES03LA**
		Part number	BES M05ED-NOD08B-BP00.3-GS49-R03	BES M05ED-NOD08B-BP02-R03
Operating voltage U_B			10...30 V DC	10...30 V DC
Rated operating current I_e			100 mA	100 mA
Reverse polarity protected			Yes	Yes
Short-circuit protected			Yes	Yes
Ambient temperature range			–25...+70 °C	–25...+70 °C
Sensor degree of protection per IEC 60529			IP 67	IP 67
Approvals			CE, cULus	CE, cULus
Housing material			Stainless steel	Stainless steel
Material of sensing face			Ceramic	Ceramic
Connection			0.3 m cable PUR with M8 connector, 3-pin	2 m cable PUR, 3×0.14 mm²
Pressure rated to			**100 bar**	**100 bar**

a) Sealing washer
b) Plain washer
c) Mounting nut
Included in the scope of delivery!

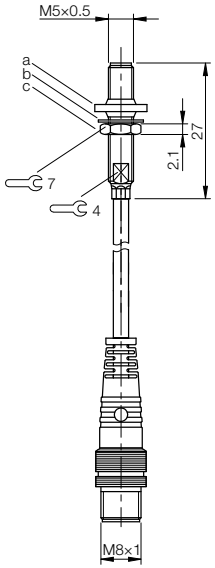

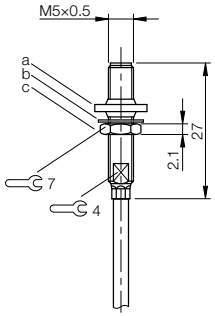

Application areas

- Coolant/lubricant sector
- Laboratories
- Low-pressure hydraulic systems
- Valves
- Pneumatic systems
- Industrial cleaning
- Special machine construction

more added value

- Greater switching distances for increased performance reserves
- Saves time during installation because adjustments are minimized
- Greater reliability in practice, even if the detected objects vibrate
- Housing and sensor identification optimized for the requirements in the automobile industry
- Perfectly suited for applications with variable detection objects (steel, AL, CuZn and Cu)

Size		**M8 × 1**
Mounting type		Flush
Rated switching distance s_n		**2 mm**
PNP NO	**Ordering code**	**BES03YP**
	Part number	BES M08MG1-PSC20A-S04G-W
Operating voltage U_B		10...30 V DC
Rated operating current I_e		100 mA
Reverse polarity/short-circuit protected		Yes/yes
Ambient temperature range		–25...+70 °C
Switching frequency f		1000 Hz
Degree of protection per IEC 60529		IP 67
Approvals		CE, cULus
Housing material		Brass, PTFE coated
Material of sensing face		LCP
Connection		M12 connector, 3-pin, A-coded

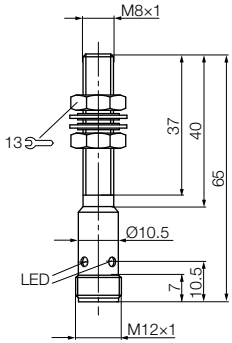

Application areas

- Welding lines
- Lightweight construction
- Automobile suppliers
- Material handling technology
- Electric motors and electrical brakes
- Special machine construction

Weld Immune Factor 1+ Sensors

A plus for your application

M12×1	**M18×1**	**M18×1**	**M18×1**	**M30×1.5**
Flush	Flush	Flush	Quasi-flush	Flush
4 mm	**8 mm**	**8 mm**	**12 mm**	**15 mm**
BES03YR	**BES03YT**	**BES03YU**	**BES03YW**	**BES03YY**
BES M12MG-PSC40A-S04G-W	BES M18MG-PSC80A-S04G-W	BES M18MI-PSC80A-S04G-W	BES M18MG-PSC12A-S04G-W	BES M30MI-PSC15A-S04G-W
10...30 V DC	10...30 V DC	10...30 V DC	10...30 V DC	10...30 V DC
200 mA	200 mA	200 mA	200 mA	200 mA
Yes/yes	Yes/yes	Yes/yes	Yes/yes	Yes/yes
–25...+70 °C	–25...+70 °C	–25...+70 °C	–25...+70 °C	–25...+70 °C
2000 Hz	350 Hz	600 Hz	600 Hz	250 Hz
IP 67	IP 67	IP 67	IP 67	IP 67
CE, cULus	CE, cULus	CE, cULus	CE, cULus	CE, cULus
Brass, PTFE coated	Brass, PTFE coated	Brass, PTFE coated	Brass, PTFE coated	Brass, PTFE coated
PPS GF40	PPS GF40	PPS GF40	PPS GF40	PPS GF40
M12 connector, 3-pin, A-coded	M12 connector, 3-pin, A-coded	M12 connector, 3-pin, A-coded	M12 connector, 3-pin, A-coded	M12 connector, 3-pin, A-coded

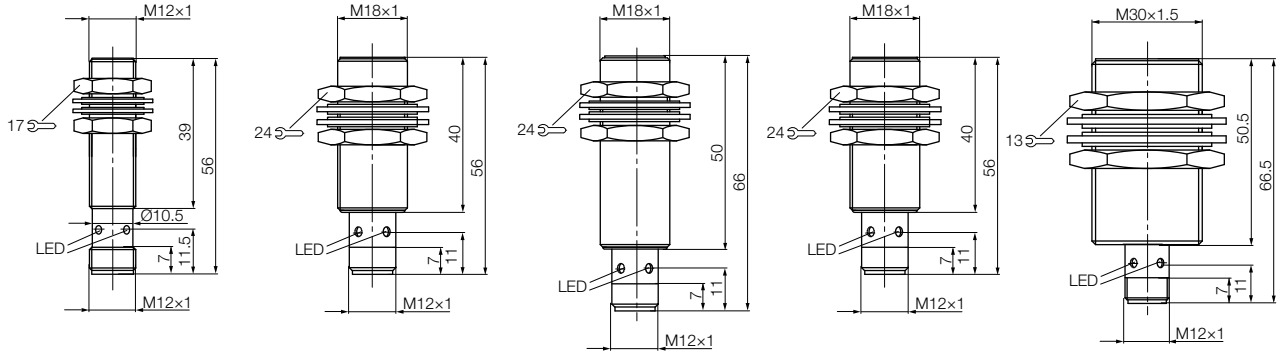

Installation in metal for **BES03YW** requires: Observe clear zone!

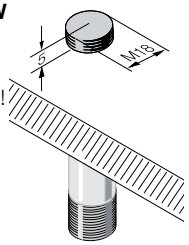

more added value

- Optimization of system availability
- Reduction in maintenance costs
- Increase in process quality

The ultra-high temperature-resistant inductive sensors can be used in temperature ranges up to +160 °C. These sensors are ideally suited to harsh environments in the steel industry, in plastic injection molding machines and in forging and foundry processes.

CE

Size		
Mounting type		
Rated switching distance s_n		
PNP, NO	**Ordering code**	
	Part number	
Operating voltage U_B		
Voltage drop U_d at I_e		
Rated operating current I_e		
Ambient temperature range		
Switching frequency f		
Degree of protection per IEC 60529		
Housing material		
Sensing surface material		
Connection		

For Extreme Applications up to +160 °C

Ultra-high temperature-resistant inductive sensors

+160 °C High temperature range!	+160 °C High temperature range!	+160 °C High temperature range!	+160 °C High temperature range!
M18×1	**M18×1**	**M30×1.5**	**M30×1.5**
Flush	Non-flush	Flush	Non-flush
5 mm	**8 mm**	**10 mm**	**15 mm**
BES043T	**BES043U**	**BES043W**	**BES043Y**
BES 515-326-SA49-D-TF-02	BES 515-360-SA13-D-TF-02	BES 515-327-SA22-D-TF-02	BES 515-362-SA4-D-TF-02
10...30 V DC	10...30 V DC	10...30 V DC	10...30 V DC
2.5 V	2.5 V	2.5 V	2.5 V
200 mA	200 mA	200 mA	200 mA
–25...+160 °C	**–25...+160 °C**	**–25...+160 °C**	**–25...+160 °C**
200 Hz	200 Hz	200 Hz	200 Hz
IP 69K	IP 69K	IP 69K	IP 69K
Stainless steel 1.4571	Stainless steel 1.4571	Stainless steel 1.4571	Stainless steel 1.4571
PEEK	PEEK	PEEK	PEEK
2 m cable FEP, 3×0.34 mm²	2 m cable FEP, 3×0.34 mm²	2 m cable FEP, 3×0.34 mm²	2 m cable FEP, 3×0.34 mm²

Rated operating current

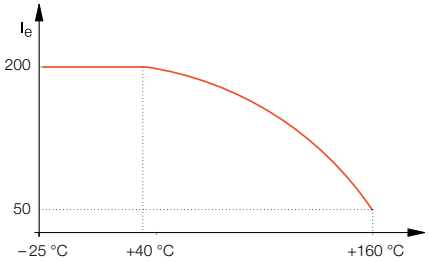

more added value

Size		**Ø 12×50 mm**	**M12×50 mm**	**M12×45 mm**	**M12×65 mm**	**Ø 12×54.5 mm**
Mounting type		Flush	Flush	Flush	Flush	Non-flush
Rated switching distance s_n		**2 mm**	**2 mm**	**4 mm**	**4 mm**	**4 mm**
PNP, NO	**Ordering code**	**BES0430**	**BES0444**	**BES0433**	**BES0435**	**BES0431**
	Part number	BES G12EE1-PSY20B-S04G-L02	BES M12EE1-PSY20B-S04G-L01	BES M12EE-PSC40B-S04G-L01	BES M12EI-PSC40B-S04G-L01	BES G12EE1-PSY40F-S04G-L02
PNP, NC	**Ordering code**			**BES0432**	**BES0434**	
	Part number			BES M12EE-POC40B-S04G-L01	BES M12EI-POC40B-S04G-L01	
NPN, NO	**Ordering code**				**BES0436**	
	Part number				BES M12EI-NSC40B-S04G-L01	
Operating voltage U_B		10...30 V DC	10...30 V DC	10...30 V DC	10...30 V DC	10...30 V DC
Voltage drop U_d at I_e		3.5 V	3.5 V	2 V	2.5 V	3.5 V
Rated operating current I_e		130 mA*	130 mA*	200 mA	200 mA	130 mA*
Reverse polarity/short-circuit protected		Yes/yes	Yes/yes	Yes/yes	Yes/yes	Yes/yes
Ambient temperature range		–40...+105 °C	–40...+105 °C	–25...+85 °C	–25...+85 °C	–40...+105 °C
Switching frequency f		800 Hz	800 Hz	2000 Hz	1000 Hz	400 Hz
Approvals/conformity		CE, cULus, Ecolab, FDA compliant	CE, cULus, Ecolab, FDA compliant	CE, cULus, Ecolab, FDA compliant	CE, cULus, Ecolab, FDA compliant	CE, cULus, Ecolab, FDA compliant
Degree of protection		IP 69K and IP 68 per BWN Pr. 27	IP 69K and IP 68 per BWN Pr. 27	IP 69K and IP 68 per BWN Pr. 27	IP 69K and IP 68 per BWN Pr. 27	IP 69K and IP 68 per BWN Pr. 27
Housing material		Stainless steel 1.4571	Stainless steel 1.4571	Stainless steel 1.4404	Stainless steel 1.4404	Stainless steel 1.4571
Sensing surface material		PEEK	PEEK	LCP	LCP	PEEK
Connection		M12 connector	M12 connector	M12 connector	M12 connector	M12 connector

Stainless Steel

IP 68 as per BWN

IP 69K

FDA

ECOLAB

H_2O_2 resistant

Balluff offers a large selection of sensors for the food industry

PROXI*NOX*

Sensors for the Food Industry

New inductive Proxinox sensors

	M12×54.5 mm	**Ø 18×45 mm**	**M18×45 mm**	**M18×65 mm**	**Ø 18×54.5 mm**	**M18×54.5 mm**
	Non-flush	Flush	Flush	Flush	Non-flush	Non-flush
	4 mm	**5 mm**	**5 mm**	**8 mm**	**8 mm**	**8 mm**
	BES0443	**BES0439**	**BES0441**	**BES0437**	**BES043A**	**BES0442**
	BES M12EE1-PSY40F-S04G-L01	BES G18EE1-PSY50B-S04G-L02	BES M18EE1-PSY50B-S04G-L01	BES M18EI-PSC80B-S04G-L01	BES G18EE1-PSY80F-S04G-L02	BES M18EE1-PSY80F-S04G-L01
				BES0438		
				BES M18EI-POC80B-S04G-L01		
	10...30 V DC	10...30 V DC	10...30 V DC	10...30 V DC	10...30 V DC	10...30 V DC
	3.5 V	3.5 V	3.5 V	2.5 V	3.5 V	3.5 V
	130 mA*	130 mA*	130 mA*	200 mA	130 mA*	130 mA*
	Yes/yes	Yes/yes	Yes/yes	Yes/yes	Yes/yes	Yes/yes
	–40...+105 °C	–40...+105 °C	–40...+105 °C	–40...+85 °C	–40...+105 °C	–40...+105 °C
	400 Hz	500 Hz	500 Hz	700 Hz	200 Hz	200 Hz
	CE, cULus, Ecolab, FDA compliant	CE, cULus, Ecolab, FDA compliant	CE, cULus, Ecolab, FDA compliant	CE, cULus, Ecolab, FDA compliant	CE, cULus, Ecolab, FDA compliant	CE, cULus, Ecolab, FDA compliant
	IP 69K and IP 68 per BWN Pr. 27	IP 69K and IP 68 per BWN Pr. 27	IP 69K and IP 68 per BWN Pr. 27	IP 69K and IP 68 per BWN Pr. 27	IP 69K and IP 68 per BWN Pr. 27	IP 69K and IP 68 per BWN Pr. 27
	Stainless steel 1.4571	Stainless steel 1.4571	Stainless steel 1.4571	Stainless steel 1.4404	Stainless steel 1.4571	Stainless steel 1.4571
	PEEK	PEEK	PEEK	PEEK	PEEK	PEEK
	M12 connector	M12 connector	M12 connector	M12 connector	M12 connector	M12 connector

***Current decrease curve**

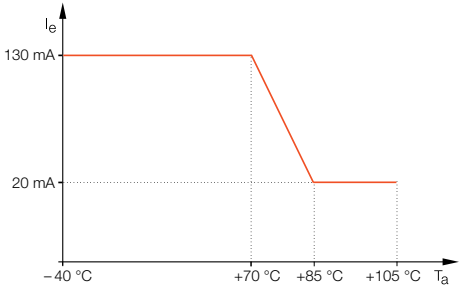

Steam jet tested!

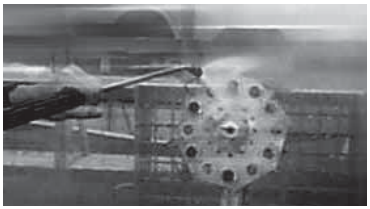

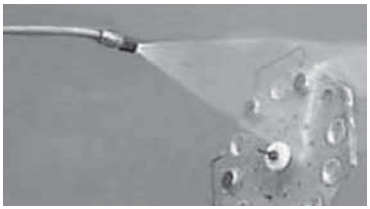

more added value

Compact sensor designs with large switching distances are required in material handling technology. In addition, the switching and operating state of the sensor can be identified from far away.

Housing optimized for material handling technology

- Highly visible corner LEDs
- Sensor head can be mounted in five positions
- Connector outlet set to position within a 270° range

Factor 1 sensors are the first choice for welding applications because they have a Teflon-coated sensing face and are immune to magnetic fields.

Size		
Mounting type		
Rated switching distance s_n		
PNP NO	**Ordering code**	
	Part number	
Operating voltage U_B		
Rated operating current I_e		
Reverse polarity/short-circuit protected		
Ambient temperature range		
Switching frequency f		
Sensor degree of protection per IEC 60529		
Approvals		
Housing material		
Material of sensing face		
Connection		

Inductive Q40 Block Sensors with Corner LEDs

Optimized for material handling technology applications

Factor 1
Magnetic field immune

Factor 1
Magnetic field immune

Factor 1
Magnetic field immune

40×40×66 mm	**40×40×66 mm**	**40×40×66 mm**	**40×40×66 mm**	**40×40×66 mm**
Flush	Non-flush	Flush	Non-flush	Non-flush
20 mm	**40 mm**	**20 mm**	**35 mm**	**40 mm**
BES0306	**BES0308**	**BES0305**	**BES0307**	**BES0304**
BES Q40KFU-PSC20B-S04G-012	BES Q40KFU-PSC40F-S04G-012	BES Q40KFU-PSC20A-S04G-012	BES Q40KFU-PSC35E-S04G-012	BES Q40KFU-PAC40E-S04G-012
10...30 V DC	10...30 V DC	10...30 V DC	10...30 V DC	10...30 V DC
200 mA	200 mA	200 mA	200 mA	200 mA
Yes/yes	Yes/yes	Yes/yes	Yes/yes	Yes/yes
–25...+70 °C	–25...+70 °C	–25...+70 °C	–25...+70 °C	–25...+70 °C
100 Hz	60 Hz	200 Hz	200 Hz	200 Hz
IP 67	IP 67	IP 67	IP 67	IP 67
CE, cULus	CE, cULus	CE, cULus	CE, cULus	CE, cULus
PA	PA	PA	PA	PA
PA	PA	PA Teflon coated	PA Teflon coated	PA Teflon coated
M12 connector, 3-pin, A-coded	M12 connector, 3-pin, A-coded	M12 connector, 3-pin, A-coded	M12 connector, 3-pin, A-coded	M12 connector, 3-pin, A-coded

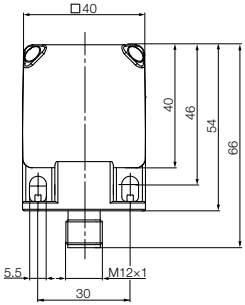

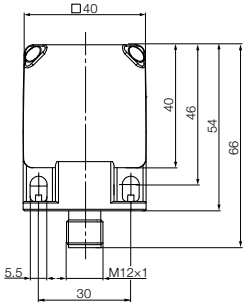

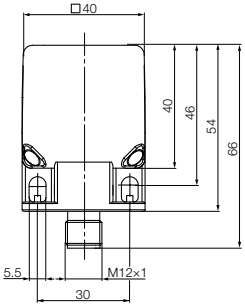

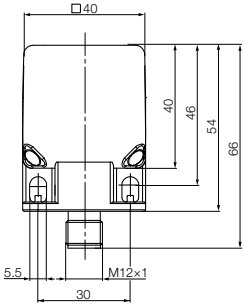

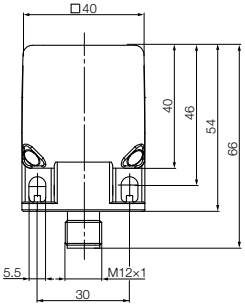

more added value

- Easy installation (since they can be mounted side-by-side and universally installed, stacked with a spacing of > 20 mm)
- Very reliable (due to inductive sensor principle)
- Ideal for the detection of small parts (with integrated pulse extension, permanently set)

Applications

- Detection of nails, screws, welded studs, rivets or similar.
- Ejection monitoring
- Part counting
- Wire-breakage monitoring
- Nail machines for pallet manufacturing
- Infeed monitoring in assembly technology
- Backlog reporting for infeed tubes

Inductive ring sensors BES IKVS

Optimal for automated assembly

Size		35×60×20 mm	35×60×20 mm	35×60×20 mm
Inside diameter d_w		Ø 10.1 mm	Ø 15.1 mm	Ø 25.1 mm
Minimum object size steel taper (St 37)		Ø 2 mm	Ø 3 mm	Ø 4 mm
Target velocity max.		60 m/s	60 m/s	60 m/s
PNP, NO	**Ordering code**	**BES03JA**	**BES03JC**	**BES03JH**
	Part number	BES IKVS-010.23-G-S4	BES IKVS-015.23-G-S4	BES IKVS-025.23-G-S4
Operating voltage U_B		10...30 V DC	10...30 V DC	10...30 V DC
Voltage drop U_d at I_e		≤ 2 V	≤ 2 V	≤ 2 V
Rated insulation voltage U_i		75 V DC	75 V DC	75 V DC
Rated operating current I_e		400 mA	400 mA	400 mA
Rated operating current I_0 max.		≤ 10 mA	≤ 10 mA	≤ 10 mA
Reverse polarity/short-circuit protected		Yes/yes	Yes/yes	Yes/yes
Ambient temperature T_a		–25...+70 °C	–25...+70 °C	–25...+70 °C
Function indicator		Yes	Yes	Yes
Degree of protection per IEC 60529		IP 65	IP 65	IP 65
Housing material		Plastic	Plastic	Plastic
Material of sensing face		Plastic	Plastic	Plastic
Connection		M12 connector, 3-pin, A-coded	M12 connector, 3-pin, A-coded	M12 connector, 3-pin, A-coded
Pulse prolongation		60 ms	60 ms	60 ms

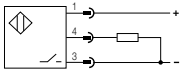

Installation in series:

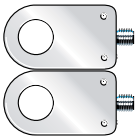

Installation in a stack:

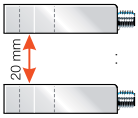

1) LED function indicator
2) LED operating voltage

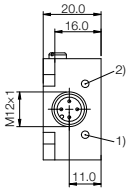

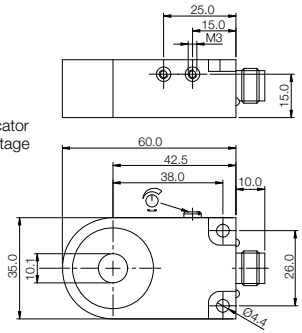

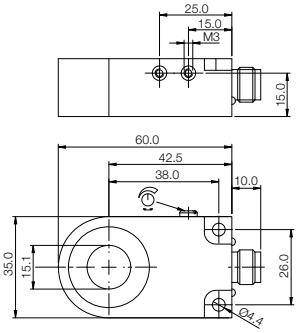

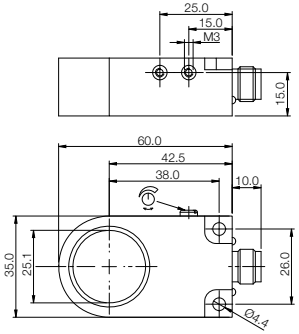

more added value

Inductive tube sensors BES complement the line of ring sensors. Optimized for tube infeeds in automated assembly, they detect small parts easily and reliably.

- Simple attachment to infeed tube
- Pulse extension of 150 ms results in a reliable detection of fast-moving parts
- Object speed max. 20 m/s

Inductive Tube Sensors BES Z06K

Fast and easy to install

Size		17×78.5×11.9 mm	17×78.5×11.9 mm
Minimum object size		Screw M3×5	Screw M3×5
Rated switching distance s_n		16 mm	16 mm
PNP, NO	**Ordering code**	**BES0428**	**BES0429**
	Part number	BES Z06K-PSC16F-S49G	BES Z06K-PSC16F-BP00,1-GS04
Operating voltage U_B		10...30 V DC	10...30 V DC
Rated operating current I_e		200 mA	200 mA
Reverse polarity/short-circuit protected		Yes/yes	Yes/yes
Ambient temperature T_a		–25...+70 °C	–25...+70 °C
Function indicator		Yes	Yes
Degree of protection per IEC 60529		IP 67	IP 67
Housing material		PA 6.6	PA 6.6
Connection		M8 connector, 3-pin	M12 connector, 3-pin, A-coded with 0.1 m cable PUR
Pulse prolongation		150 ms	150 ms

Rated switching distance s_n based on FE360 steel plate (18×18×1 mm).

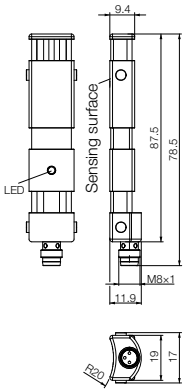

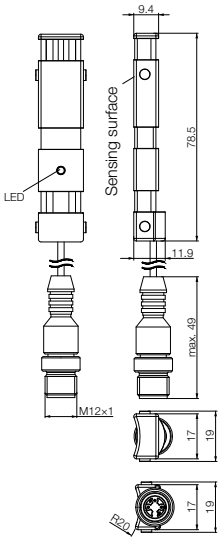

Centerline spacing for side-by-side mounting

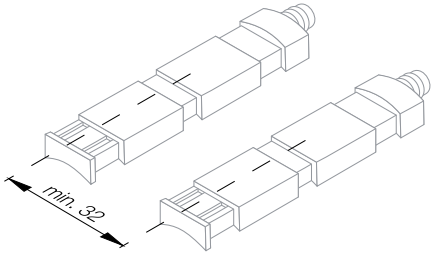

more added value

- No misalignment between emitter and receiver
- Easy, fast commissioning
- Reliable detection of transparent objects

Reliable Transparency Detection

Now also available with BGL laser fork sensors

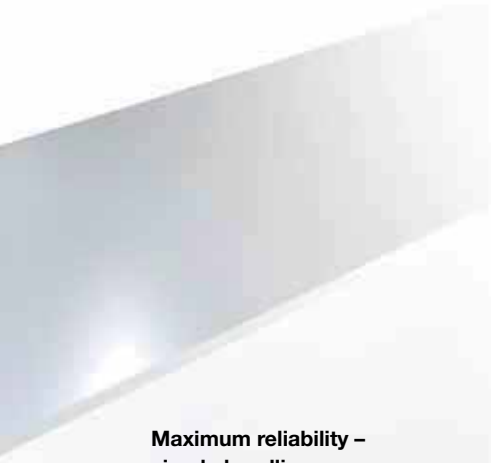

Maximum reliability – simple handling
Balluff BGL laser fork sensors ensure completely reliable detection of transparent objects. These also provide the unsurpassed advantages offered by fork sensors: the transmitter and receiver do not need to be aligned. And there is no longer any misalignment. BGL laser fork sensors are therefore characterized by simple and fast commissioning as well as maximum reliability.

■ **Ordering code**
□ Part number

		BGL002T BGL 80A-009-S49	**BGL002U** BGL 80A-010-S49
Switching output	PNP	■	
	NPN		■
Switching type	NC/NO selectable	■	■
Connection	M8 connector, 3-pin	■	■
Fork opening	80 mm	■	■
	120 mm		
Light type		Laser	
Switching frequency		5000 Hz	
Degree of protection		IP 67	
Housing material		Gd-Zn	
Optical surface		Glass	

For additional information visit our website at **www.balluff.com**

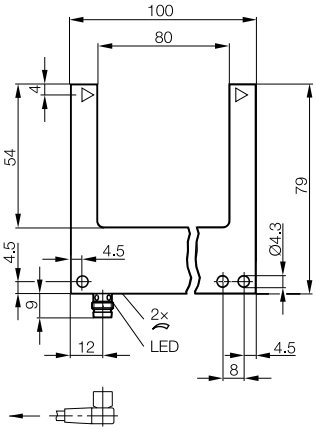

more added value

- High degree of process reliability
- Better quality
- Improved efficiency

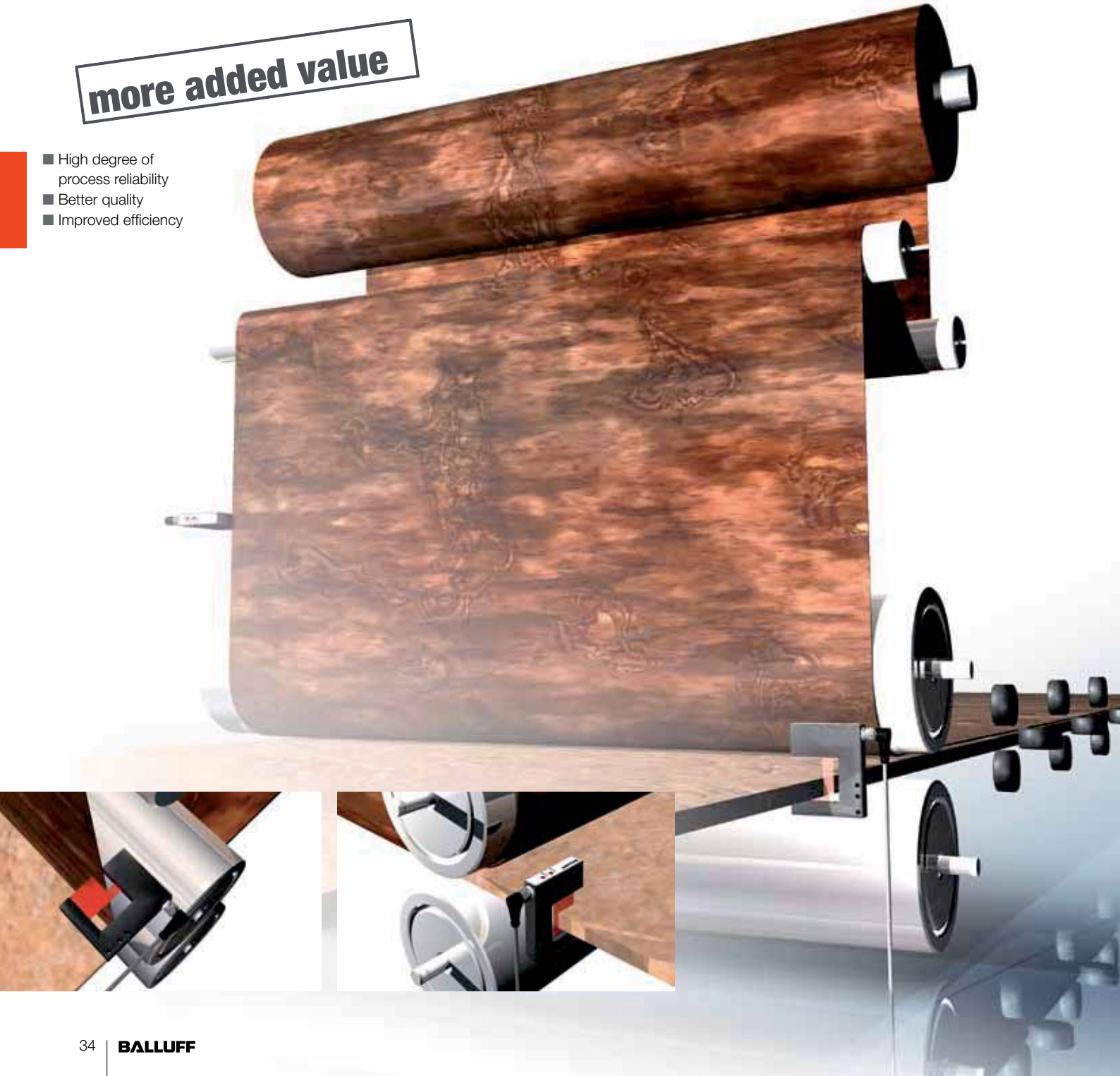

Reliable Web Edge Control

Analog BGL fork sensors: a light band accomplishes more

In-process correction
The light band on analog fork sensors not only ensures completely reliable detection, but also determines the position of objects with extreme accuracy: In-process correction could not be easier.
Process reliability and product quality are significantly improved. Use the BGL light band fork sensor – with enhanced efficiency as a welcome extra.

Technical highlights
- Analog signal proportional to the skin depth of the object
- Stable value, even in the event of height variations
- High degree of soiling resistance and compensation
- Fieldbus connection with IO-Link

■ **Ordering code**
□ Part number

		BGL002Z BGL 30C-001-S4	**BGL0037** BGL 50C-001-S4	**BGL0033** BGL 30C-005-S4	**BGL0031** BGL 30C-003-S4	**BGL003C** BGL 50C-005-S4	**BGL0039** BGL 50C-003-S4	**BGL0035** BGL 30C-007-S4	**BGL003F** BGL 50C-007-S4
Basic: 2 switching outputs		■	■						
Advanced: 1 analog output with 1 switching/error output				■	■	■	■		
Premium: IO-Link								on request	
Fork opening	30 mm	■		■	■			■	
	50 mm		■			■	■		■
Switching output	PNP	■	■	■	■	■	■	■	■
	NPN	on request							
Analog output	0...10 V DC			■		■			
	4...20 mA				■		■		
Light type		Red light							
Measurement field length		25 mm							
Resolution		≤ 0.1 mm							
Housing material		Al anodized							
Connection		M12 connector, 4-pin							

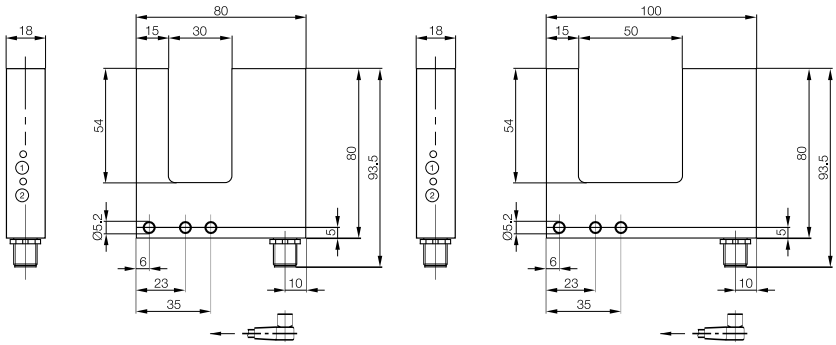

Integral air rinsing nozzle to prevent dust from accumulating on the optical transmitter and receiver. Simple connection via standard pneumatic system.

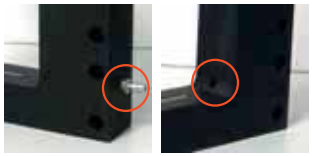

Reliably detect the smallest parts
Balluff through-beam sensors BOS Q08M are innovative, compact products that reach a high performance level. Nothing else produces comparable results under similar conditions. These sensors are therefore particularly recommended if there is little space available. A focused light beam is able to detect even the smallest of parts, grooves or holes in a completely reliable manner, allowing you to control e.g. heights very accurately. And in cramped systems, the high-performance, compact units are also characterized by the fact that their fine laser beam (PinPoint laser/red light) can be aligned very precisely in the middle of closely set parts to ensure reliable detection.

- Compact design for limited space
- Rugged metal housing
- Reliable detection of small parts up to 0.4 mm (PinPoint red light) or 0.28 mm (laser)
- Uses a patented mounting concept for Bosch profiles that allows quick, precise positioning

more added value

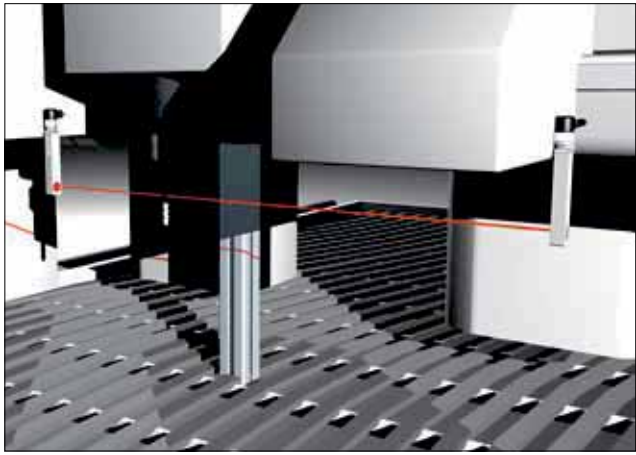

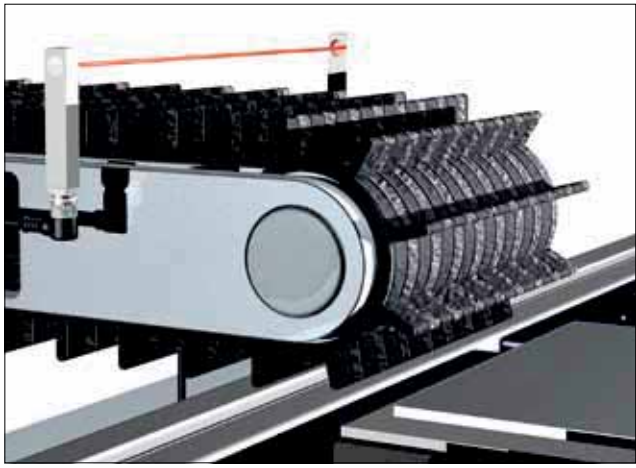

Red Light and Laser Through-beam Sensors BOS Q08M

Extreme accuracy in a compact, high-performance design

PinPoint

Laser

		Emitter				Receiver						Emitter				Receiver					
Ordering code / Part number		**BOS00YK** BOS Q08M-X-KS20-S49	**BOS00YH** BOS Q08M-X-KS20-00,2-S49	**BOS00YJ** BOS Q08M-X-KS20-02		**BOS00YF** BOS Q08M-PS-KE20-S49	**BOS00YC** BOS Q08M-PS-KE20-00,2-S49	**BOS00YE** BOS Q08M-PS-KE20-02	**BOS00YA** BOS Q08M-PO-KE20-S49	**BOS00Y8** BOS Q08M-PO-KE20-00,2-S49	**BOS00Y9** BOS Q08M-PO-KE20-02	**BOS018K** BOS Q08M-X-LS20-S49	**BOS019M** BOS Q08M-X-LS20-00,2-S49	**BOS018M** BOS Q08M-X-LS20-02		**BOS0199** BOS Q08M-PS-LE20-S49	**BOS0197** BOS Q08M-PS-LE20-00,2-S49	**BOS0198** BOS Q08M-PS-LE20-02	**BOS0196** BOS Q08M-PO-LE20-S49	**BOS0194** BOS Q08M-PO-LE20-00.2-S49	**BOS0195** BOS Q08M-PO-LE20-02
PNP						■	■	■	■	■	■					■	■	■	■	■	■
NPN						on request										on request					
NO						■	■	■								■	■	■			
NC									■	■	■								■	■	■
Connection	M8 connector, 3-pin	■				■			■			■				■			■		
	Cable with M8 connector, 3-pin		■				■			■			■				■			■	
	Cable			■				■			■			■				■			■
Range		0...2.2 m										0...3 m									
Light type		Red light (PinPoint LED)										Laser (laser class 1)									
Switching frequency		400 Hz										400 Hz									
Smallest detectable part		0.4 mm										0.28 mm									
Degree of protection		IP 67										IP 67									
Housing material		Nickel-plated Gd-Zn										Nickel-plated Gd-Zn									
Optical surface		PMMA										PMMA									

For additional information visit our website at **www.balluff.com**

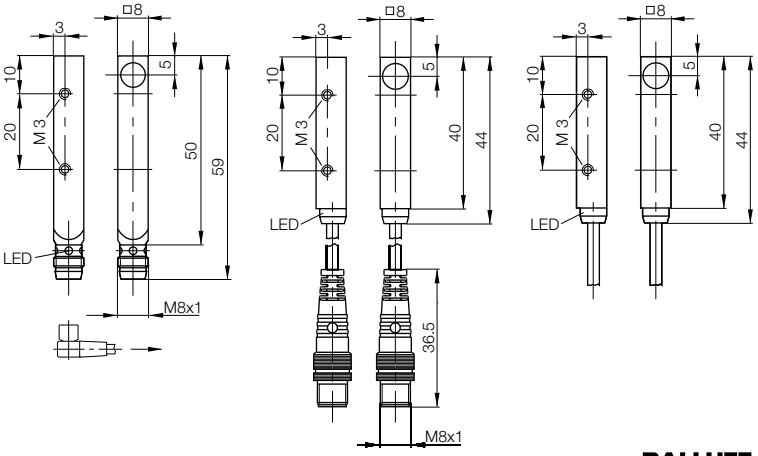

Clamp holder

For Bosch profile: **BES Q08-KH-3**

more added value

- Rapid commissioning as no adjustments are required
- The compact design also enables use in the smallest of spaces
- Innovative PinPoint technology: reliable suppression of objects outside the detection field

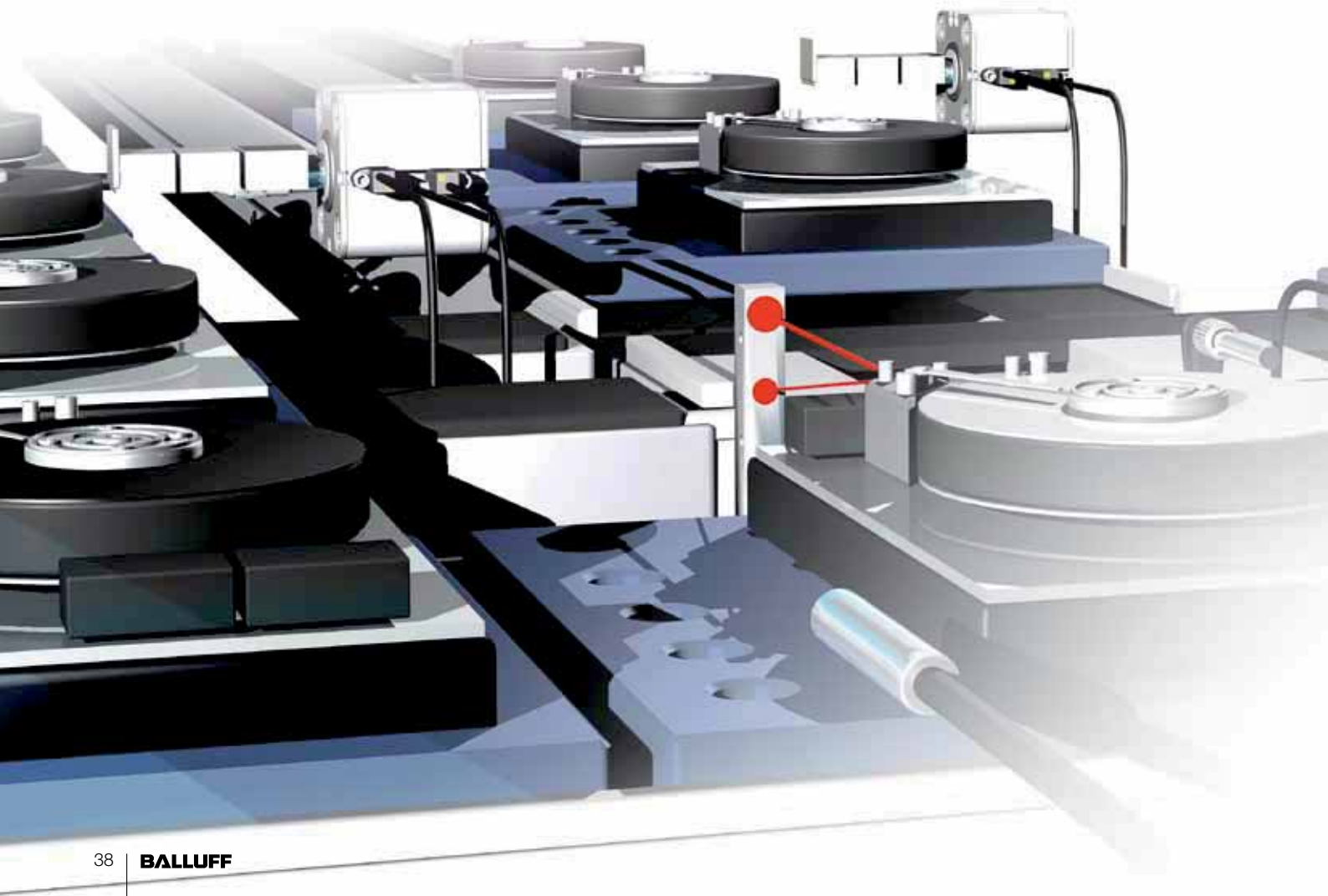

BOS Q08M Diffuse Sensor with Fixed Background Suppression

Quick installation

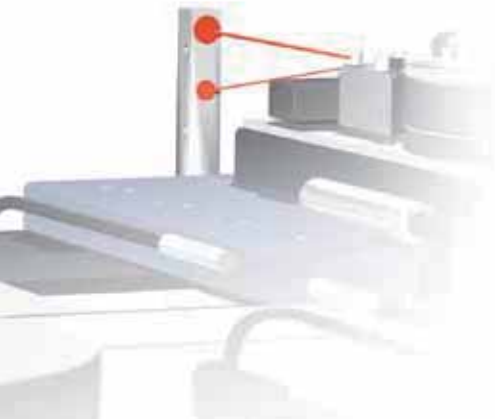

■ **Ordering code**
□ Part number

		Diffuse sensor					
		BOS0160 BOS Q08M-PS-KF20-S49	**BOS0163** BOS Q08M-PS-KF20-00,2-S49	**BOS0161** BOS Q08M-PS-KF20-02	**BOS0164** BOS Q08M-PO-KF20-S49	**BOS0168** BOS Q08M-PO-KF20-00.2-S49	**BOS0165** BOS Q08M-PO-KF20-02
Switching output	PNP	■	■	■	■	■	■
	NPN	on request					
Switching type	NO	■	■	■			
	NC				■	■	■
Connection	M8 connector, 3-pin	■			■		
	Cable with M8 connector, 3-pin		■			■	
	Cable			■			■
Sensing distance		5...50 mm					
Light type		Red light PinPoint LED					
Switching frequency		400 Hz					
Degree of protection		IP 67					
Housing material		Nickel-plated Gd-Zn					
Optical surface		PMMA					

For additional information visit our website at **www.balluff.com**

Rapid application – high reliability
Only Balluff offers the powerful combination of fixed background suppression and homogeneous red light through innovative PinPoint technology. And all of this is contained in a compact design, thereby enabling simple installation in even the most confined spaces.

In addition, the sensors are ready for immediate use without any adjustment. A new, patented mounting concept also ensures flush installation in aluminum profiles. For Bosch profile: **BES Q08-KH-3**

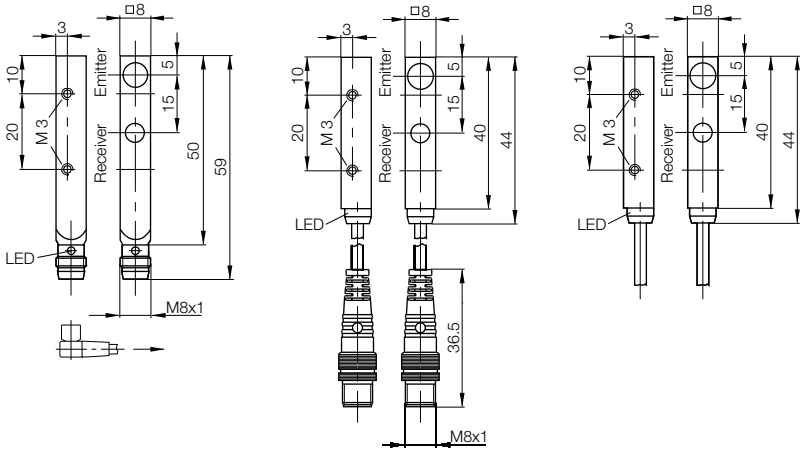

Balluff M18 laser diffuse sensors with background suppression are a genuine highlight. They are available with different light types, allowing you to simply select according to your requirements. The perfectly focused light beam is able to detect the smallest of parts, grooves or holes with maximum precision and reliability. The large light spot of the red light variant with 300 mm is ideal for detecting objects with notches, holes or openings, because breakthroughs and free areas are simply bridged.
High-precision distinction between foreground and background at extremely short distances – the 150 mm red light version is ideal in this case.

- Exact, almost color-independent object detection
- For every application the correct light type – laser or red light
- Precise setting with 10-turn potentiometer
- Robust M18 metal housing with same design for all types
- Universal fastening and alignment thanks to wide range of assembly accessories

more added value

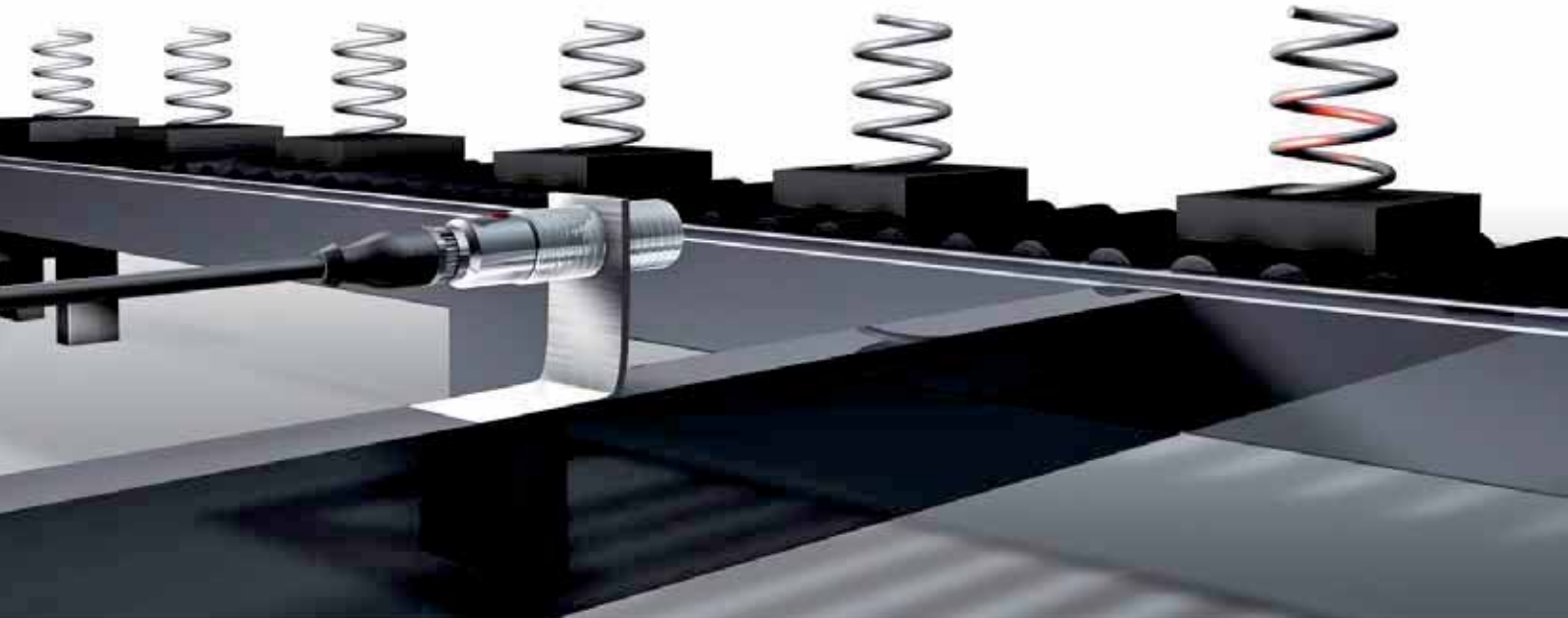

Photoelectric Sensors M18

BOS 18M background suppression – expertise with all kinds of light

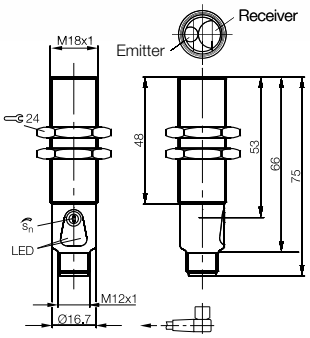

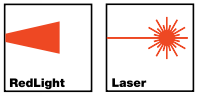

■ **Ordering code**
■ Part number

		Red light						Laser				
		BOS019N BOS 18M-PSV-RH22-S4	**BOS014W** BOS 18M-PA-RH22-S4	**BOS019T** BOS 18M-NA-RH22-S4	**BOS01J3** BOS 18M-NA-RH23-S4	**BOS01J2** BOS 18M-PSV-RH23-S4	**BOS01J4** BOS 18M-PA-RH23-S4	**BOS002K** BOS 18M-PSV-LH22-S4	**BOS002H** BOS 18M-PS-LH22-S4	**BOS001L** BOS 18M-NSV-RH22-S4	**BOS01C4** BOS 18M-PSV-LH23-S4	**BOS01C5** BOS 18M-PA-LH23-S4
Sensing distance		30...300 mm			30...150 mm			30...150 mm				
Gray value shift		low			very low			very low				
Light type	Red light	■	■	■	■	■	■					
	Laser							■	■	■	■	■
	Laser class							2	2	2	1	1
Switching output	PNP, antivalent		■				■					■
	PNP, NO	■				■		■	■		■	
	NPN, antivalent			■	■							
	NPN, NO									■		
Error output		■				■		■		■	■	
Optical surface		Glass						PMMA				
Housing material		Nickel-plated brass										
Operating voltage U_B		10...30 V DC										
Switching frequency		500 Hz										
Degree of protection (IEC 60529)		IP 67										
Ambient temperature T_a		–5...+55 °C										

Versions with NC contact upon request.

Accessories

- Clamping block BOS 18,0-KB-1 with ball joint, plastic (ordering code: **BAM00T3**)
- Sensor holder BMS CS-P-D12-AD18-00 for Balluff mounting system, 90° angle, plastic (ordering code: **BAM002P**)
- Sensor holder BMS CS-M-D12-ID18-01, for Balluff mounting system, 90° angle, stainless steel (ordering code: **BAM0032**)
- Adjusting unit BMS AD-M-002-D12/D18 for Balluff mounting system, for fine adjustment (ordering code: **BAM0038**)
- Connector BCC M415-0000-1A-003-PX0434-020, M12 straight, 2 m PUR cable (ordering code: **BCC032F**)

Further accessories upon request.

more added value

- Sound performance and reliable object detection
- Ideal for standard applications, e.g. in automation
- Cost-effective alternative for all types of light
- Plug and play: All sensors with fixed setting
- Universal fastening thanks to wide range of assembly accessories

We often come across systems in which a sensor adjustment is not required, not possible or is undesirable. Our BOS 18M diffuse sensors and light barriers from the GlobalProx family are the correct choice for these applications. All of these sensors have a fixed setting. This shortens the time required for system commissioning and protects against manipulation. Equipped with a sound basic range of functions, these sensors also have the best possible price/performance ratio.

Global

Photoelectric Sensors M18

BOS 18M GlobalProx – sound and cost-effective

Ordering code
Part number

		Diffuse sensor					Retroreflective sensor					Through-beam sensor						
		BOS01FA	BOS 18M-PS-RD23-S4	**BOS01FC**	BOS 18M-PO-RD23-S4	**BOS01HL**	BOS 18M-PS-ID23-S4	**BOS01F8**	BOS 18M-PS-PR23-S4	**BOS01F9**	BOS 18M-PO-PR23-S4	**BOS01HK**	BOS 18M-PS-IR23-S4	**BOS01FE**	BOS 18M-PS-RE23-S4	**BOS01FF**	BOS 18M-PO-RE23-S4	**BOS01FH**	BOS 18M-X-RS23-S4	**BOS01HP**	BOS 18M-PS-IE23-S4	**BOS01HM**	BOS 18M-X-IS23-S4
Detection range		400 mm		400 mm		600 mm		4 m*		4 m*		6 m*		20 m		20 m		20 m		25 m		25 m	
Light type	Red light	■		■				■		■				■		■		■					
	Infrared					■						■								■		■	
Switching output	PNP, NO	■				■		■				■		■						■			
	PNP, NC			■						■						■							
	Emitter																	■				■	
Polarizing filter								■		■													
Operating voltage U_B		10...30 V DC																					
Switching frequency		400 Hz																					
Housing material		Nickel-plated brass																					
Optical surface		Glass																					
Degree of protection (IEC 60529)		IP 67																					
Ambient temperature T_a		–5...+55 °C																					

* based on reflector BOS R-1

Accessories
- Reflector BOS R-1, round, dia. 84 mm (ordering code: **BAM00UK**)
- Reflector BOS R-9, 50x50 mm (ordering code: **BAM00WL**)
- Clamping block BOS 18,0-KB-1, with ball joint, plastic (ordering code: **BAM00T3**)
- Mounting nut (2 pcs. required) 6KTMU M18X1-MS (ordering code: **500152**)
- Mounting clamp BES 18,0-BS-1, plastic (ordering code: **BAM00F2**)
- Retaining bracket BES 18-HW-1, angle for surface assembly 90°, aluminum (ordering code: **BAM00EY**)
- Sensor holder BMS CS-P-D12-AD18-00, for Balluff mounting system, 90° angle, plastic (ordering code: **BAM002P**)
- Sensor holder BMS CS-M-D12-ID18-01, for Balluff mounting system, 90° angle, stainless steel (ordering code: **BAM0032**)
- Connector BCC M415-0000-1A-003-PX0434-020, M12 straight, 2 m PUR cable (ordering code: **BCC032F**)

Further accessories upon request.

Prox

more added value

- Simple, fast mounting
- Large ranges
- Highly visible red light
- Precise switching response

Precise switching response – excellent repeat accuracy
Cutting-edge LED technology and the latest Fresnel lenses are combined in this unit to form an innovative and powerful photo-electric sensor. What this means in practice: Improved repeat accuracy and precise switching behavior even at large distances.

Technical highlights
- Large operating range
- Rugged M18 metal housing
- State-of-the-art LED technology with sharply contoured light spot

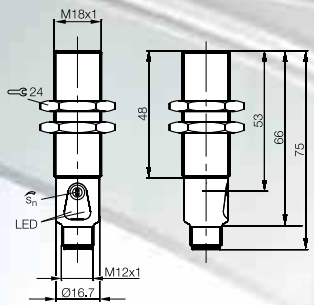

Photoelectric Red Light Sensors M18

For maximum precision

■ **Ordering code**
□ Part number

		BOS01CA	BOS 18M-PA-RD21-S4	**BOS01E7**	BOS 18M-PS-RD21-S4	**BOS01E8**	BOS 18M-PO-RD21-S4	**BOS01CF**	BOS 18M-PA-RD20-S4	**BOS01C1**	BOS 18M-PS-RD20-S4	**BOS01E3**	BOS 18M-PO-RD20-S4	**BOS01CE**	BOS 18M-PA-PR20-S4	**BOS01C3**	BOS 18M-PS-PR20-S4	**BOS01CZ**	BOS 18M-PO-PR20-S4	**BOS01C0**	BOS 18M-X-RS20-S4	**BOS01EP**	BOS 18M-XT-RS20-S4	**BOS01CC**	BOS 18M-PA-RE20-S4	**BOS01C2**	BOS 18M-PS-RE20-S4	**BOS01EE**	BOS 18M-PO-RE20-S4
Type	Diffuse sensor energetic	■		■		■		■		■		■																	
	Retroreflective sensor													■		■		■											
	Through-beam emitter																			■									
	Through-beam emitter with test input																					■							
	Through-beam receiver																							■		■		■	
Switching output	PNP, antivalent	■						■						■															
	PNP, NO			■						■						■										■			
	PNP, NC					■						■						■										■	
Sensing range	30…300 mm																												
	1...300 mm	■		■		■																							
	1...600 mm							■		■		■																	
	0.1...7 m													■		■		■											
	0...20 m																			■		■		■		■		■	
Switching frequency	400 Hz	■		■		■		■		■		■		■		■		■						■		■		■	
Setting		270° potentiometer																											
Light type		Red light																											
Housing material		Nickel-plated brass																											
Connection		M12 connector, 4-pin																											

NPN versions on request.

Accessories
- Reflector BOS R-1 (ordering code: **BAM00UK**)
- Straight connector, 2 m PUR, other lengths on request
  BCC M415-0000-1A-003-PX0434-020 (ordering code: **BCC032F**)
- Right-angle connector, 2 m PUR, other lengths on request
  BCC M425-0000-1A-003-PX0434-020 (ordering code: **BCC032Y**)

Further accessories upon request.

more added value

- Reliable object detection even in a contaminated environment
- Invisible light – does not irritate personnel
- Simple and fast setting with potentiometer
- Through-beam sensor with test input for function control
- Wide range of assembly accessories

The successful BOS 18M series now also includes invisible infrared light. This type of light demonstrates its advantages particularly in heavily contaminated production environments: Objects are reliably detected unimpeded by dust or dirt. With its range of more than 100 meters, the high-power version of the through-beam sensor impresses particularly in this area. The standardized design of all BOS 18Ms permits a simple change between the different types of light – without assembly change.

Photoelectric Sensors M18

BOS 18M infrared – invisible power

Ordering code / Part number		Diffuse sensor				Retroreflective sensor								Through-beam sensor									
		BOS01EY	BOS 18M-PA-ID20-S4	**BOS01EZ**	BOS 18M-NA-ID20-S4	**BOS01F0**	BOS 18M-PA-IR20-S4	**BOS01F1**	BOS 18M-PS-IR20-S4	**BOS01F2**	BOS 18M-NA-IR20-S4	**BOS01HR**	BOS 18M-PA-IR21-S4	BOS 18M-NA-IR21-S4	**BOS01F3**	BOS 18M-PA-IE20-S4	**BOS01F4**	BOS 18M-NA-IE20-S4	**BOS01F5**	BOS 18M-X-IS20-S4	**BOS01HN**	BOS 18M-XT-IS20-S4	**BOS01HT**	BOS 18M-X-IS24-S4	**BOS01HU**	BOS 18M-XT-IS24-S4
Detection range		800 mm				10 m*						7 m*			depending on emitter				50 m				100 m		
Light type	PNP	■				■		■				■			■										
	NPN			■						■				■			■								
Switching output	antivalent	■		■		■				■		■		■	■		■								
	NO							■																	
	Emitter																		■		■		■		■
	Test input																				■				■
Polarizing filter												■		■											
Operating voltage U_B		10...30 V DC																							
Switching frequency		400 Hz																							
Housing material		Nickel-plated brass																							
Optical surface		Glass																							
Degree of protection (IEC 60529)		IP 67																							
Ambient temperature T_a		–5...+55 °C																							

* based on reflector BOS R-1

Accessories

- Reflector BOS R-1, circular, dia. 84 mm (ordering code: **BAM00UK**)
- Reflector BOS R-9, 50x50 mm (ordering code: **BAM00WL**)
- Clamping block BOS 18,0-KB-1, with ball joint, plastic (ordering code: **BAM00T3**)
- Mounting clamp BES 18,0-BS-1, plastic (ordering code: **BAM00F2**)
- Retaining bracket BES 18-HW-1, angle for surface assembly 90°, aluminum (ordering code: **BAM00EY**)
- Sensor holder BMS CS-P-D12-AD18-00, for Balluff mounting system, 90° angle, plastic (ordering code: **BAM002P**)
- Sensor holder BMS CS-M-D12-ID18-01, for Balluff mounting system, 90° angle, stainless steel (ordering code: **BAM0032**)
- Connector BCC M415-0000-1A-003-PX0434-020, M12 straight, 2 m PUR cable (ordering code: **BCC032F**)

Further accessories upon request.

more added value

- Continuous sensor monitoring of contamination and malfunctions
- Switchable output
- Simple teach-in procedure
- Standardized BOS-18M design for fast sensor change

For users who prefer the teach-in procedure for sensor setting, Balluff now offers its successful red light series BOS 18M, with long ranges, precise switching behavior and very high levels of repeat accuracy. The top sensor in its class is quickly set at the push of a button.

Further advantage: The BOS 18M Teach-in reports "difficulties" immediately by means of our patented diagnostic system "Dynamic Sensor Control", which is available as an option. The DSC allows you to react immediately to contamination or malfunctions. Even users without DSC can make use of the contamination detection as the sensors are also optionally available with a separate alarm output.

Further information on "Dynamic Sensor Control" is available from page 186.

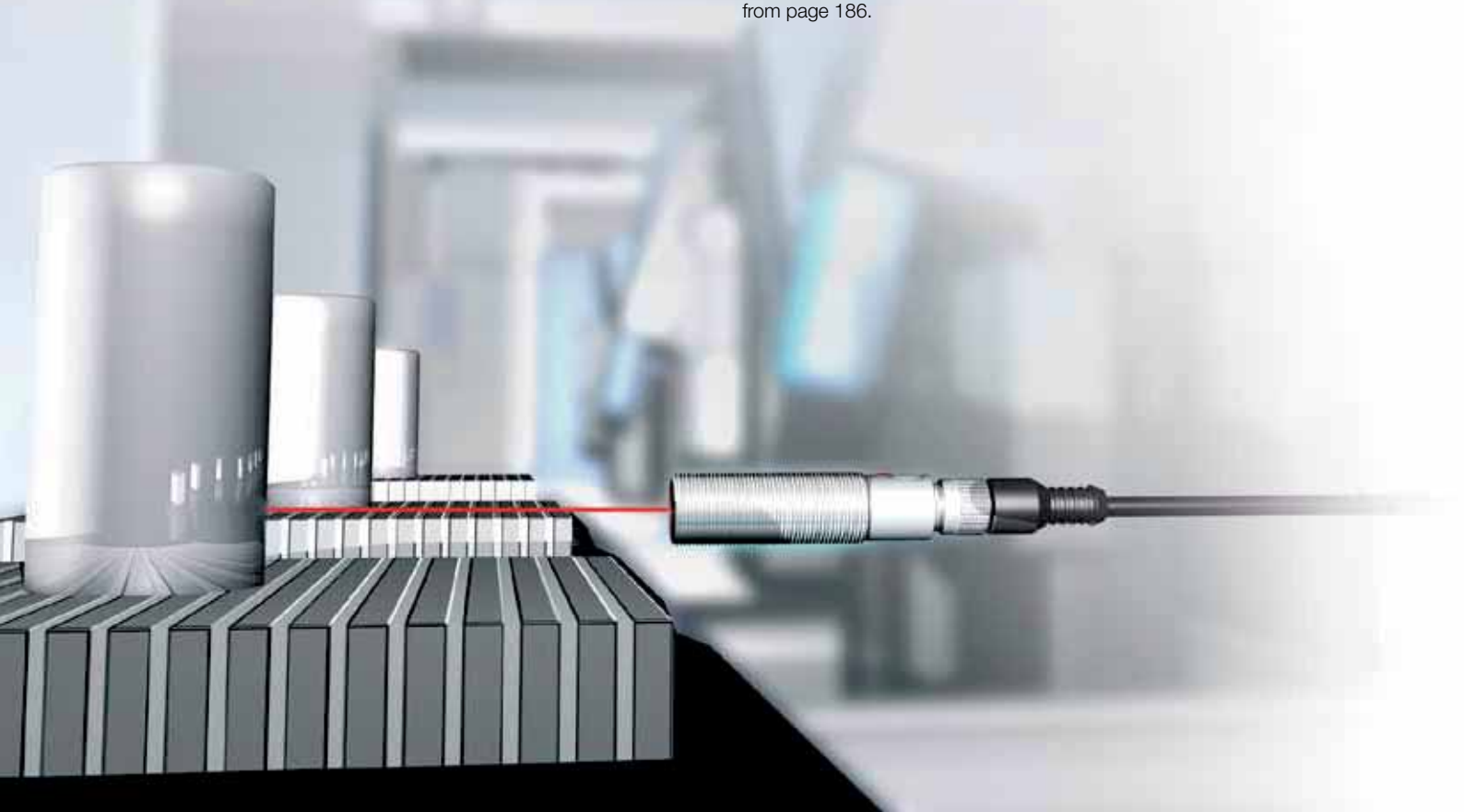

Photoelectric Sensor with Additional Diagnostics

BOS 18M Teach-in

	Diffuse sensor (energetic)				Retro-reflective sensor				Through-beam sensor			
Ordering code / Part number	**BOS01CU**	BOS 18M-PUD-RD30-S4	**BOS01J8**	BOS 18M-PUV-RD30-S4	**BOS01CT**	BOS 18M-PUD-PR30-S4	**BOS01J9**	BOS 18M-PUV-PR30-S4	**BOS01CW**	BOS 18M-PUD-RE30-S4	**BOS01J7**	BOS 18M-PUV-RE30-S4	**BOS01CY**	BOS 18M-X-RS30-S4
Detection range	500 mm				5 m*				20 m					
Switching type – NC/NO selectable	■		■		■		■		■		■			
Switching type – Emitter													■	
Dynamic Sensor Control	■				■				■					
Separate contamination output			■				■				■			
Polarizing filter					■		■							
Switching frequency	200 Hz		1 kHz		200 Hz		1 kHz		200 Hz		1 kHz			
Operating voltage U_B	10...30 V DC													
Housing material	Nickel-plated brass													
Optical surface	Glass													
Degree of protection (IEC 60529)	IP 67													
Ambient temperature T_a	–5...+55 °C													

* based on reflector BOS R-1

Accessories

- Reflector BOS R-1, circular, dia. 84 mm (ordering code: **BAM00UK**)
- Reflector BOS R-9, 50x50 mm (ordering code: **BAM00WL**)
- Clamping block BOS 18,0-KB-1, with ball joint, plastic (ordering code: **BAM00T3**)
- Mounting clamp BES 18,0-BS-1, plastic (ordering code: **BAM00F2**)
- Retaining bracket BES 18-HW-1, angle for surface assembly 90°, aluminum (ordering code: **BAM00EY**)
- Sensor holder BMS CS-P-D12-AD18-00, for Balluff mounting system, 90° angle, plastic (ordering code: **BAM002P**)
- Sensor holder BMS CS-M-D12-ID18-01, for Balluff mounting system, 90° angle, stainless steel (ordering code: **BAM0032**)
- Connector BCC M415-0000-1A-003-PX0434-020, M12 straight, 2 m PUR cable (ordering code: **BCC032F**)

Further accessories upon request.

Photoelectric Sensors M18

BOS 18M infrared diffuse sensor – especially for glass detection

New

- Special optics enable glass detection, low blind zones, and high ambient light security.
- Secure detection of solar modules in production (typical distance 2...25 mm).
- Scanning glass detection (typical distance 2...40 mm).
- Secure detection of high-gloss surfaces over a wide angular range.
- Suppression of objects in the background starting at 250 mm

The detection of glass always poses a special challenge for photoelectric sensors. Often, a retroreflective sensor cannot be installed, so detection by means of a diffuse sensor is the only option. For this, Balluff now also provides a solution within the successful BOS 18M model line. The special optics of the sensor ensure that glass surfaces, for example in solar modules, can be detected with certainty.
But the sensor's strengths also come into play in a totally different area: with high-gloss objects. These are reliably detected from all directions over a large angular range.

Additionally, the sensor is extremely insensitive to ambient light and can even suppress objects in the background.

		Diffuse sensor energetic
Ordering code		**BOS01J1**
Part number		BOS 18M-PS-ID24-S4
Switching output	PNP normally open	■
Sensing range	Glass	2...40 mm
	Solar module	2...25 mm
	Gray chart 90%	2...80 mm
Switching frequency		200 Hz
Setting		none
Light type		Infrared
Housing material		Nickel-plated CuZn
Optical surface		PMMA
Connection		M12 connector, 4-pin
Ambient temperature T_a		–5...+55 °C

Accessories
- BOS 18.0-KB-1 clamping block, with ball joint, plastic (ordering code: **BAM00T3**)
- BES 18.0-BS-1 mounting clamp, plastic (ordering code: **BAM00F2**)
- BES 18-HW-1 retaining bracket, angle for surface assembly 90°, aluminum (ordering code: **BAM00EY**)
- Sensor holder BMS CS-P-D12-AD18-00, for Balluff assembly system, 90° angle, plastic (ordering code: **BAM002P**)
- Sensor holder BMS CS-M-D12-ID18-01, for Balluff assembly system, 90° angle, stainless steel (ordering code: **BAM0032**)
- Connector BCC M415-0000-1A-003-PX0434-020, M12 straight, 2 m PUR cable (ordering code: **BCC032F**)

Further accessories upon request.

- Accurate switching characteristics for precision positioning tasks
- High ranges and compact design for greater freedom of system design
- Highly visible red light/laser light for precision alignment
- LEDs visible from all sides
- Varied mounting options
- Laser variants ideal for small part detection
- Outstanding price/performance ratio

more added value

Accessories
- Reflector for red light variants BOS R-1 (ordering code: **BAM00UK**)
- Reflector for laser variants BOS R-22 (ordering code: **BAM00UY**)
- Lens protector BAM PC-XO-006-23K-1 (ordering code: **BAM01L8**)
- Mounting bracket BMS CS-M-D12-B23K-05 (ordering code: **BAM01AW**)
- Straight connector, 2 m PUR, other lengths on request BCC M415-0000-1A-003-PX0434-020 (ordering code: **BCC032F**)

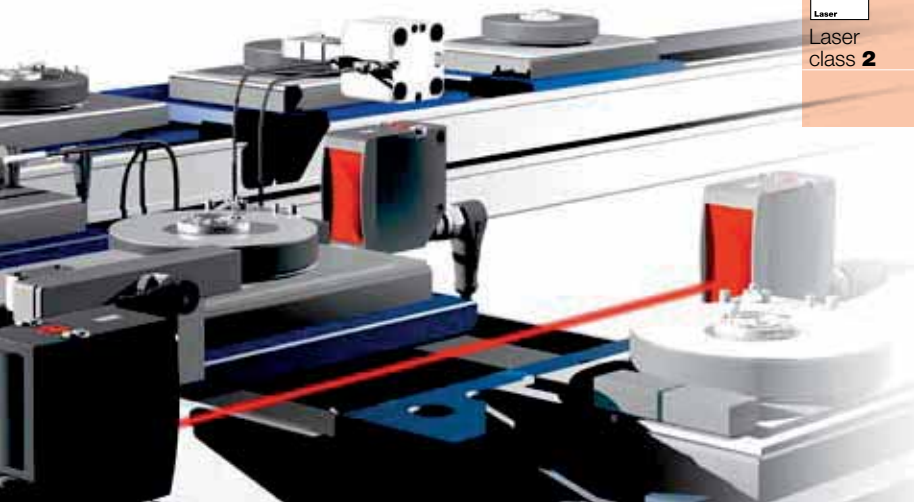

Type			
Detection range			
LED red light	PNP Antivalent	**Ordering code**	
		Part number	
	PNP NC/NO selection	**Ordering code**	
		Part number	
	Emitter	**Ordering code**	
		Part number	
Operating voltage U_B			
Setting			
Switching frequency			
Housing material			
Optical surface			
Degree of protection per IEC 60529			
Ambient temperature T_a			
Connection			

Detection range			
Laser class **1**	PNP Antivalent	**Ordering code**	
		Part number	
	PNP NC/NO selection	**Ordering code**	
		Part number	
Laser class **2**	PNP Antivalent	**Ordering code**	
		Part number	
	PNP NC/NO selection	**Ordering code**	
		Part number	
	Emitter	**Ordering code**	
		Part number	
Operating voltage U_B			
Setting			
Switching frequency			
Housing material			
Optical surface			
Degree of protection per IEC 60529			
Ambient temperature T_a			
Connection			

Types with NPN upon request.

New Photoelectric Sensors BOS 23K

Red light and laser provide a competitive edge

	Diffuse sensor	Diffuse sensor with background suppression	Retroreflective sensor	Through-beam sensor Receiver	Through-beam sensor Emitter
	0...2 m	**0...1,2 m**	**0...14 m**	**0...25 m**	**0...25 m**
	BOS01FM	**BOS01FL**	**BOS01FN**	**BOS01FP**	
	BOS 23K-PA-RD10-S4	BOS 23K-PA-RH10-S4	BOS 23K-PA-RR10-S4	BOS 23K-PA-RE10-S4	
	BOS016Z	**BOS0178**	**BOS016P**	**BOS016F**	
	BOS 23K-PU-RD10-S4	BOS 23K-PU-RH10-S4	BOS 23K-PU-RR10-S4	BOS 23K-PU-RE10-S4	
					BOS016E
					BOS 23K-XT-RS11-S4
	10...30 V DC	10...30 V DC	10...30 V DC	10...30 V DC	10...30 V DC
	Teach-in	18-turn potentiometer	Teach-in	Teach-in	Teach-in
	600 Hz	600 Hz	600 Hz	500 Hz	
	ABS	ABS	ABS	ABS	ABS
	PMMA	PMMA	PMMA	PMMA	PMMA
	IP 69K	IP 69K	IP 69K	IP 69K	IP 69K
	–20...+60 °C	–20...+60 °C	–20...+60 °C	–20...+60 °C	–20...+60 °C
	M12-Steckverbinder, 4-polig	M12-Steckverbinder, 4-polig	M12-Steckverbinder, 4-polig	M12-Steckverbinder, 4-polig	M12-Steckverbinder, 4-polig

	0...1,2 m	**0...1,2 m**	**0...14 m**	**0...30 m**	**0...30 m**
		BOS01FR	**BOS01HJ**	**BOS01FU**	
		BOS 23K-PA-LH10-S4	BOS 23K-PA-LR10-S4	BOS 23K-PA-LE10-S4	
		BOS017C	**BOS016U**	**BOS016L**	
		BOS 23K-PU-LH10-S4	BOS 23K-PU-LR10-S4	BOS 23K-PU-LE10-S4	
		BOS01FT			
		BOS 23K-PA-LH20-S4			
	BOS0175	**BOS017H**			
	BOS 23K-PU-LD20-S4	BOS 23K-PU-LH20-S4			
					BOS 016K
					BOS 23K-XT-LS11-S4
	10…30 V DC	12…30 V DC	10…30 V DC	10…30 V DC	10…30 V DC
	Teach-in	18-turn potentiometer	Teach-in	Teach-in	Teach-in
	600 Hz	1 kHz	2 kHz	3.5 kHz	
	ABS	ABS	ABS	ABS	ABS
	PMMA	PMMA	PMMA	PMMA	PMMA
	IP 69K	IP 69K	IP 69K	IP 69K	IP 69K
	–20…+60°C	–20…+60°C	–20…+60°C	–20…+60°C	–20…+60°C
	M12 connector, 4-pin	M12 connector, 4-pin	M12 connector, 4-pin	M12 connector, 4-pin	M12 connector, 4-pin

more added value

- Reliable object detection even at large distances
- Real background suppression up to 2 m sensing range even on dark objects
- Simple alignment due to bright, clearly visible beam spot
- Simple and fast setting with potentiometer
- Through-beam sensor with test input for function control
- Varied and timesaving assembly options

The new light barriers and diffuse sensors in the BOS 50K series combine top performance and compact dimensions. Thanks to their long range, these all-rounders are suitable for use in numerous sectors: From the automobile industry to the woodworking industry. The background suppression, in particular, impresses with an almost color-independent detection of objects – and at maximum sensing range.

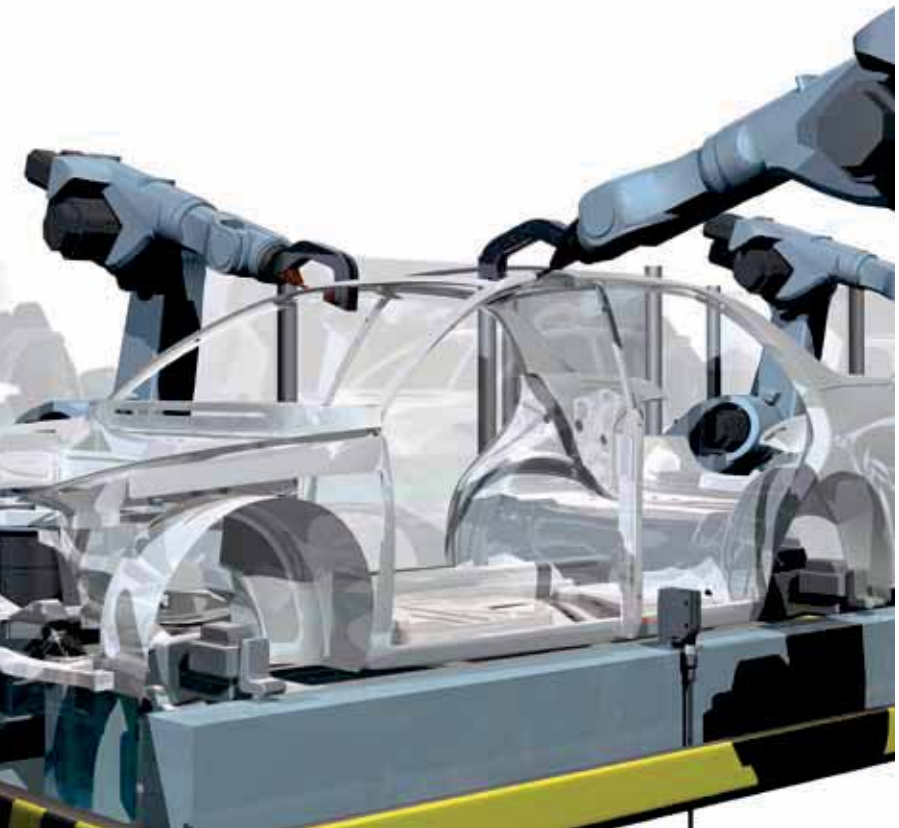

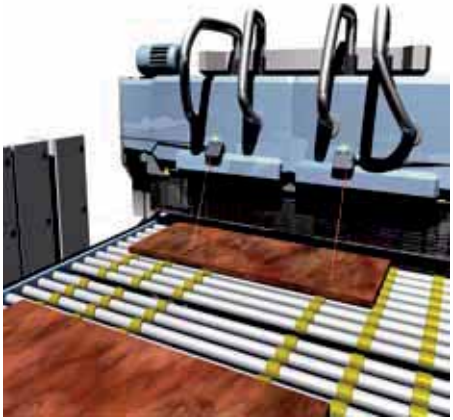

CE

Type			
Detection range			
PNP	Antivalent	**Ordering code**	
		Part number	
PNP	NO	**Ordering code**	
		Part number	
PNP	NO with fault output	**Ordering code**	
		Part number	
	Emitter with test input	**Ordering code**	
		Part number	
	Emitter without test input	**Ordering code**	
		Part number	
Gray value shift			
Operating voltage U_B			
Setting			
Switching frequency			
Housing material			
Optical surface			
Degree of protection per IEC 60529			
Ambient temperature T_a			
Connection			

Types with PNP NC contact and NPN upon request

Photoelectric Sensors BOS 50K

Even longer ranges with red light

	Diffuse sensor with background suppression	Diffuse sensor	Retroreflective sensor with polarized light	Through-beam sensor Receiver	Through-beam sensor Emitter
	200...2000 mm	**1...2000 mm**	**0.1...18 m***	**0...60 m**	
	BOS018P	**BOS01CJ**	**BOS01CR**	**BOS01CK**	
	BOS 50K-PA-RH12-S4	BOS 50K-PA-RD10-S4	BOS 50K-PA-PR10-S4	BOS 50K-PA-RE10-S4	
	BOS018N	**BOS01CP**	**BOS01CL**	**BOS01CM**	
	BOS 50K-PS-RH12-S4	BOS 50K-PS-RD10-S4	BOS 50K-PS-PR10-S4	BOS 50K-PS-RE10-S4	
	BOS0156				
	BOS 50K-PSV-RH12-S4				
					BOS01CN
					BOS 50K-XT-RS10-S4
					BOS01EU
					BOS 50K-X-RS10-S4
	< 10 %				
	10...30 V DC	10...30 V DC	10...30 V DC	10...30 V DC	10...30 V DC
	10-turn potentiometer	Potentiometer 270°	Potentiometer 270°		Potentiometer 270°
	500 Hz	400 Hz	400 Hz	400 Hz	400 Hz
	PC/ABS	PC/ABS	PC/ABS	PC/ABS	PC/ABS
	Glass	Glass	Glass	Glass	Glass
	IP 67	IP 67	IP 67	IP 67	IP 67
	–5...+55 °C	–5...+55 °C	–5...+55 °C	–5...+55 °C	–5...+55 °C
	M12 connector, 4-pin	M12 connector, 4-pin	M12 connector, 4-pin	M12 connector, 4-pin	M12 connector, 4-pin

* based on reflector R-1

Accessories
- Reflector BOS R-1, circular, dia. 84 mm (ordering code: **BAM00UK**)
- Mounting bracket BMS CS-M-D12-BX07-06, for Balluff mounting system, 90° angle (ordering code: **BAM01AY**)
- Assembly plate BMS CS-M-D12-BX05-02, for Balluff mounting system, straight (ordering code: **BAM003C**)
- Mounting bracket BAM MB-XO-005-B04-4, angle for surface assembly 90°, adjustable sensor inclination (ordering code: **BAM01E8**)
- Clamp holder BOS 21-KH-2, for fastening to dovetail (ordering code: **BAM00TH**)
- Connector BCC M415-0000-1A-003-PX0434-020 M12 straight, 2 m PUR cable (ordering code: **BCC032F**)

Further accessories upon request.

more added value

- Detection of and distinguishing between a random number of colors
- Reliably distinguishes between the smallest of color nuances
- Large sensing range of 400 mm
- Simple configuration and visualization using software
- Robust metal housing

The True Color Sensor BFS 33M is in a completely different league to conventional RGB sensors. Thanks to its high resolution, it not only detects colors but can also reliably distinguish between nuances. The True Color Sensor thus detects, e.g. minimal color deviations in injection molded parts. And it can also tell if a metal enters production polished or unpolished. Faded colors or poor print quality are detected in an instant and separated. It thus opens up completely new dimensions in quality control. The sensor uses three digital outputs and a serial interface to perform evaluations. The lab color space values are transmitted directly via this interface.

True Color Sensor BFS 33M

For distinguishing between the smallest of color nuances at the highest level

400 mm sensing range
possible with additional lens!

Type	True Color Sensor BFS
Ordering code	**BFS000L**
Part number	BFS 33M-GSS-F01-PU-02
Channels (outputs)	3 (7 colors + background)
Color space	CIELab
Switching frequency	1.5 kHz (on 3 products)
Resolution	8 enhancement settings, 12 bit
Color resolution	< 0.5 dE
Repeat accuracy	< 1 dE
Protection class	IP 54
Ambient temperature T_a	–10...+55 °C
Housing material	Al coated

Type	Plastic fiber optic BFO
Ordering code	**BFO00C4**
Part number	BFO D22-XB-LB-EAK-15-SA1-02
Operating principle	Buttons
Sensing distance	5...80 mm, up to 400 mm with additional lens
Dispersion angle	60°
Connection	SMA connector
Length	2000 mm
Ambient temperature T_a	–55...+70 °C
Fiber optic material	Plastic POF
Sleeve material	Plastic

Type	Lens (Long Range)
Ordering code	**BAM01PA**
Part number	BAM LS-FO-001-M6-L
Sensing distance	400 mm
Light spot diameter	23 mm at a distance of 400 mm
Ambient temperature T_a	–10...+140 °C
Lens material	Glass
Housing material	Aluminum-coated

Note: This lens is screwed onto the fiber optic BFO00C4

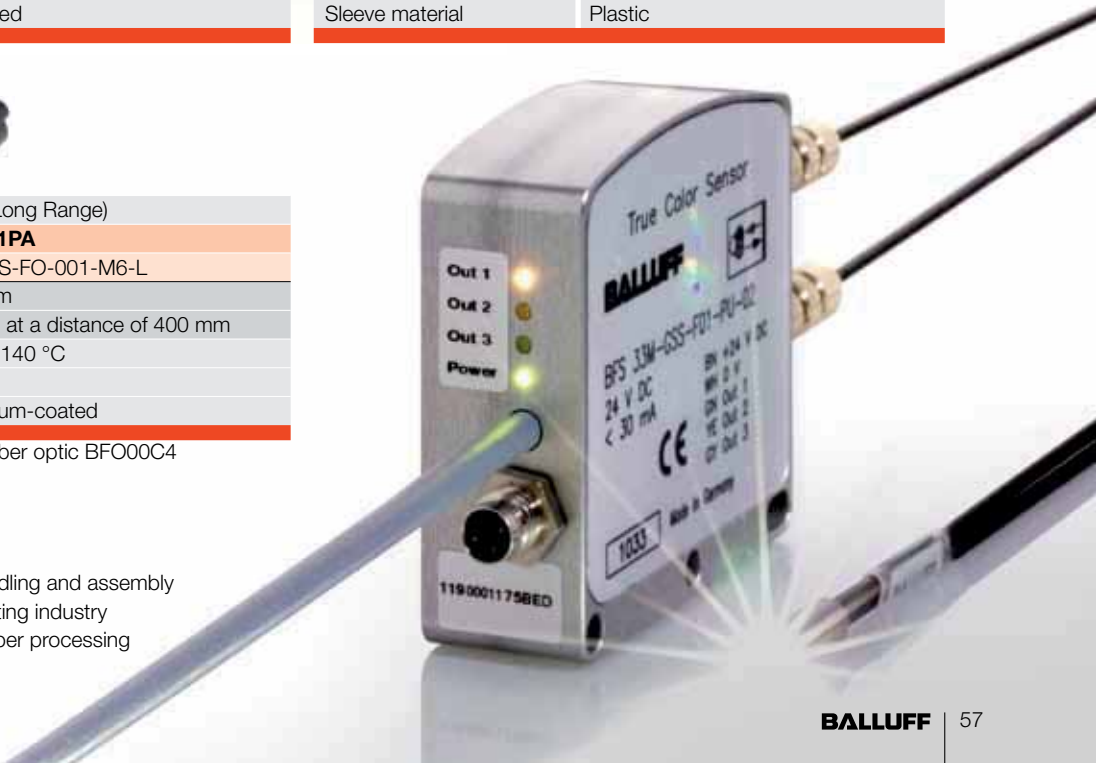

Industries

- Automobile industry
- Plastics processing
- Packaging industry
- Handling and assembly
- Printing industry
- Timber processing

Model		BMF 07M	BMF 08M	BMF 12M
Maximum switching distance (with BAM01EL)		90 mm	90 mm	90 mm
PNP NO	**Ordering code**	**BMF000E**	**BMF000P**	**BMF00C7**
	Part number	BMF 07M-PS-C-2-KPU -02	BMF 08M-PS-C-2-KPU -02	BMF 12M-PS-C-2-S4
Operating voltage U_B		10...30 V DC	10...30 V DC	10...30 V DC
Reverse polarity/short-circuit protected		Yes/yes	Yes/yes	Yes/yes
Function indicator		Yellow LED	Yellow LED	Yellow LED
Ambient temperature T_a		–25...+85 °C	–25...+85 °C	–25...+70 °C
Degree of protection per IEC 60529		IP 67	IP 67	IP 67
Connection		2 m cable PUR, 3×0.14 mm²	2 m cable PUR, 3×0.14 mm²	M12 connector, 3-pin

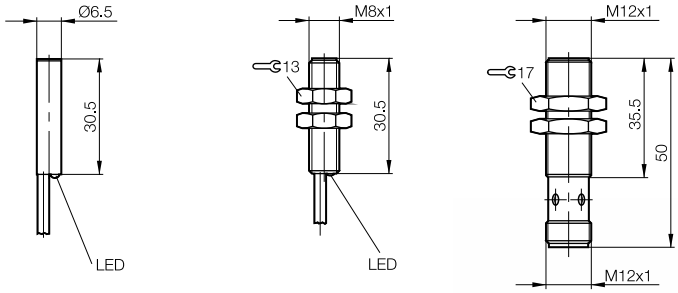

Size	Ø 15 mm	Ø 15 mm	Ø 25 mm with hole for M5 screw	Ø 22.1 mm with M5 screw hole
Ordering code	**BAM01EJ**	**BAM01EK**	**BAM01EL**	**BAM01EM**
Part number	BAM TG-MF-006	BAM TG-MF-007	BAM TG-MF-008	BAM TG-MF-009
Height	10 mm	15 mm	15 mm	10.5 mm
Max. switching distance	40 mm	65 mm	90 mm	40 mm

Reliable switching is guaranteed from 0 mm to the switching distance indicated in the table.
The specified switching distances are determined from series measurements and should be considered a starting point for selecting a suitable magnet.

Cylindrical Magnetic Field Sensors for Large Operating Ranges

Miniature design, long switching distances

Cylindrical magnetic field sensors are characterized by their small, extremely compact design. The new magnets with cylindrical magnetic field sensors for position requests are ideal for extremely long switching distances, which means that you can query positions up to 90 mm away using a single sensor with a diameter of 6.5 mm. These sensors are industrial grade and resistant to soiling. Positions can also be scanned through containers or pipes because magnetic fields can penetrate many non-magnetizable materials. The detection of codes using magnets is also possible.

- Non-contact position requests up to a distance of 90 mm
- Object detection through non-magnetizable materials
- Compact sensors and small magnets provide the perfect basis for installation
- Outstanding price/performance ratio

more added value

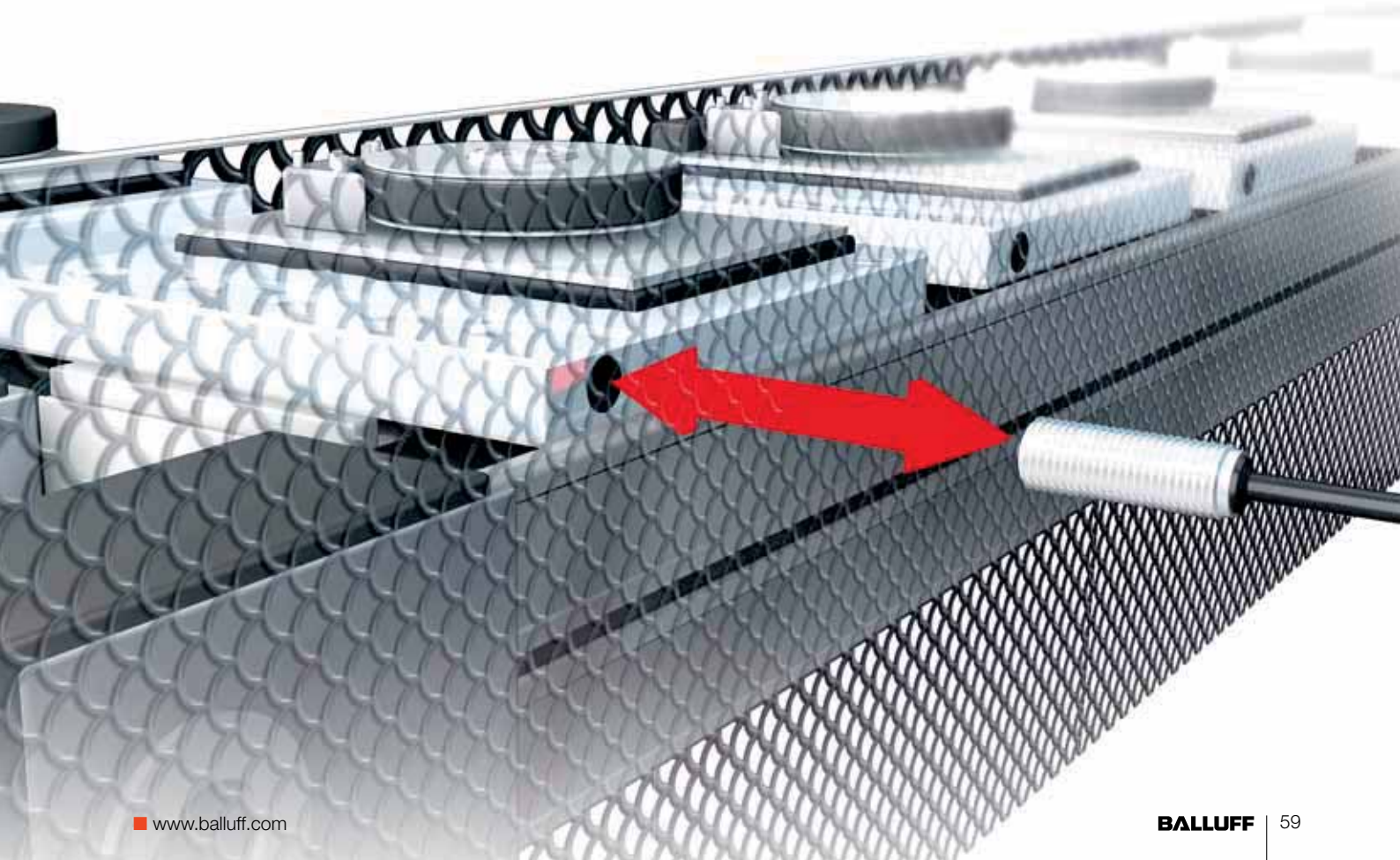

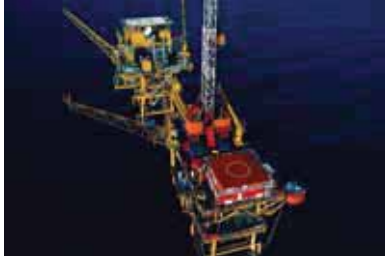

BMF 255 Magnetic ATEX Cylindrical Sensor

Flexible, simple, secure

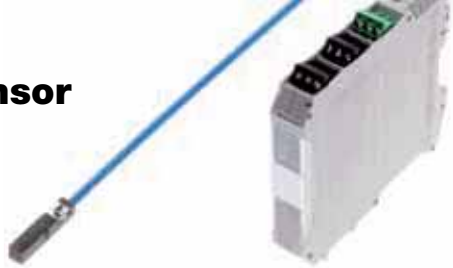

New

Balluff expands their portfolio of magnetic cylindrical sensors by adding the ATEX area. In particular, areas with continuous, long-term and frequent occurrences of dust, gases and vapors (Zone 0/20, category 1G/1D) are covered.
The sensor can simply be mounted in the T-slots, as usual. With corresponding angle brackets, round and tie bar cylinders can also be equipped without any problems. With a 6-meter long self-configurable cable, you can quickly and easily connect the sensor to the correct isolating amplifier outside of the ATEX zone. We of course provide the isolating amplifier too.

- Highest Ex protection with the category 1G/1D (Zone 0/20)
- Can be inserted from above in the T-slot quickly and easily, with clamping fixture
- Sensors, isolating amplifiers and angle brackets, all from a single source
- 6 meter long, user-fabricated cable

more added value

Description		**BMF 255**	**Isolating amplifier**
Dimensions (H×W×L)		5.2×5×25 mm	99×17.6×114.5 mm
Namur, normally open	**Ordering code**	**BMF00E4**	
	Part number	BMF 255K-N-06-EEX	
24 V DC	**Ordering code**		**FHW004P**
	Part number		STAHL 9170/20-12-11S
120...230 V AC	**Ordering code**		**FHW004R**
	Part number		STAHL 9170/20-12-21S
Operational voltage measurement U_B		8.2 V DC	
Ambient temperature T_a		–25...+70 °C	
Responsiveness		2 mT	
Switching frequency f		2 kHz	
Function indicator		yes	
Degree of protection as per IEC 60529		IP 67	
Material	Housing	PA	
	Sensing surface	PA	
	Clamping screw	Stainless steel	
Connection		6 m PVC cable, 2×0.14 mm²	
Approval		**CE, BVS 11 ATEX E071, IECEx BVS 11.0043, Ex II 1G Ex ia IIC T4 Ga, Ex II 1D Ex ia IIIC T 135 °C Da**	
Installation		Can be installed from above	
Cylinder profile		T-slot	

The isolating amplifier with relay output serves as the interface between electrical signals from the hazardous area (Ex zone) and the non-hazardous area (safe zone).

The input signals from ATEX sensors areconverted using relay switching contacts at the outputs. Input, output and auxiliary power circuits are securely galvanically isolated.

For further information, refer to the Object Detection catalog.

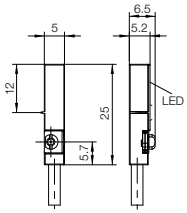

Angle bracket for round and tie bar cylinders

Part number	Cylinder profile	Part number
For round cylinders:	Profile cylinder and tie bar up to 5...11 mm	BMF 235-HW-109 (BAM01M9)
BMF 307-HW-96 (BAM01J5)	Profile cylinder and tie bar up to 9...15 mm	BMF 235-HW-110 (BAM01MA)
with hose clamp BMF size 2 (BAM00N4)	Profile cylinder and tie bar 14...20 mm	BMF 235-HW-111 (BAM01MC)

more added value

Ultrabright LED

Reliable detection of switching function from far away (25 m in bright factory building)

New mounting concept

Solid hold in the slot, sensor cannot be wrenched from the slot

Can be installed from above: easy to install with hexagon socket or slot screwdriver.

Knurled screw

Sensor screws in firmly, extremely secure hold in any slot (e.g. Parker, Festo, SMC, Bosch)

Minimum length: 23 mm!
8 mm shorter than previous model

Can also be used in space-critical applications

For other pneumatic cylinder sensors, please request a copy of our brochure "BMF magnetic field sensor product overview".

Sensors for Pneumatic Cylinders
BMF 235

Size			**BMF 235**	
Dimensions (H×W×L)			5.5×5×23.5 mm	
PNP	NO	**Ordering code**	**BMF00C4**	**BMF00AR**
		Part number	BMF 235K-PS-C-2A-SA2-S49-00,3	BMF 235K-PS-C-2A-PU-02
	NC	**Ordering code**	**BMF00C6**	**BMF00AT**
		Part number	BMF 235K-PO-C-2A-SA2-S49-00,3	BMF 235K-PO-C-2A-PU-02
NPN	NO	**Ordering code**	**BMF00C2**	**BMF00AU**
		Part number	BMF 235K-NS-C-2A-SA2-S49-00,3	BMF 235K-NS-C-2A-PU-02
	NC	**Ordering code**	**BMF00C3**	**BMF00AW**
		Part number	BMF 235K-NO-C-2A-SA2-S49-00,3	BMF 235K-NO-C-2A-PU-02
Operating voltage U_B			10...30 V DC	10...30 V DC
Ambient temperature T_a			–25...+85 °C	–25...+85 °C
Degree of protection per IEC 60529			IP 67	IP 67
Housing material			Plastic	Plastic
Connection			0.3 m cable PUR with M8 connector, 3-pin	2 m cable PUR, 3×0.14 mm²
Approval			CE, cULus	CE, cULus
Assembly			Can be installed from above	Can be installed from above
Cylinder profile			T-slot	T-slot

Other plug and cable variants are available in addition to V-Twin models. For information, visit our website at **www.balluff.de/bmf235**

With our special retaining elements, the BMF 235 can also be quickly and easily assembled on round, tie bar and profile cylinders.

Part number
For round cylinders: BMF 307-HW-96 (ordering code: **BAM01J5**) with hose clamp BMF size 2 (ordering code: **BAM00N4**)

Cylinder profile	Part number
Profile cylinder and tie bar up to 5...11 mm	BMF 235-HW-109 (ordering code: **BAM01M9**)
Profile cylinder and tie bar up to 9...15 mm	BMF 235-HW-110 (ordering code: **BAM01MA**)
Profile cylinder and tie bar 14...20 mm	BMF 235-HW-111 (ordering code: **BAM01MC**)

System	BMF 303	BMF 305	BMF 103 system
Dimensions (H×W×L)	4.5×2.9×21.6 mm	10.5×6.5×33.5 mm	16×2.8×4.9 mm
Unique features	**For miniaturized actuators**	**For larger actuators**	**Optimized for short-stroke cylinders and mini-grippers**

Part number of the most-used types: M8×1 male versions with turnable connection nut and 30 cm cable length				
PNP	NO	BMF 303K-PS-C-2A-SA2-S49-00,3	BMF 305K-PS-C-2-SA2-S49-00,3	BMF 103K-PS-C-2A-SA2-S49-00,3

Cylinder profile	Example	Part designation					
C-slot (Size 10 slot)	Festo, Sommer, Bosch	BMF 303-HW-31 Tough	BMF 303-HW-30 Compact			BMF 103-HW-102 New Hollow screw	BMF 103-HW-42
C-slot (Round slot)	SMC, Bimba, Schunk	BMF 303-HW-97 New Tough	BMF 303-HW-28 Compact			BMF 103-HW-100 New Hollow screw	BMF 103-HW-41
T-slot	General	BMF 303-HW-33 Tough	BMF 303-HW-40 Compact	BMF 305-HW-98 New Hollow screw	BMF 305-HW-20	BMF 103-HW-43	
Round cylinder	General	BMF 303-HW-59 and Hose clamp 1)		BMF 305-HW-24 undo Hose clamp 1)			
Trapezoidal slot	Bosch, Parker, Norgren	BMF 303-HW-101 New		BMF 305-HW-106 New			
Trapezoidal guide	Bosch	BMF 303-HW-80		BMF 305-HW-27			
C-slot Large	Numatics, Norgren	BMF 303-HW-62		BMF 305-HW-32 Ⓐ	BMF 305-HW-92 Ⓑ		
with rail/ SMC slot-A and slot-B	SMC	BMF 303-HW-51 (BMF 303-HW-60 2))		BMF 305-HW-26 Slot version	BMF 305-HW-99 New Hexagon socket		
Profile cylinder and tie bar 5...11 mm	General	BMF 235-HW-109 and BMF 303-HW-33 New		BMF 235-HW-109 and BMF 305-HW-20 New		BMF 235-HW-109 and BMF 103-HW-43 New	
Profile cylinder and tie bar 9...15 mm	General	BMF 235-HW-110 and BMF 303-HW-33 New		BMF 235-HW-110 and BMF 305-HW-20 New		BMF 235-HW-110 and BMF 103-HW-43 New	
Profile cylinder and tie bar 14...20 mm	General	BMF 235-HW-111 and BMF 303-HW-33 New		BMF 235-HW-111 and BMF 305-HW-20 New		BMF 235-HW-111 and BMF 103-HW-43 New	
U slot	SMC CP95	BMF 303-HW-103 New					

Cylindrical Magnetic Field Sensors with Mounting System

Now even more flexible due to new mounting elements

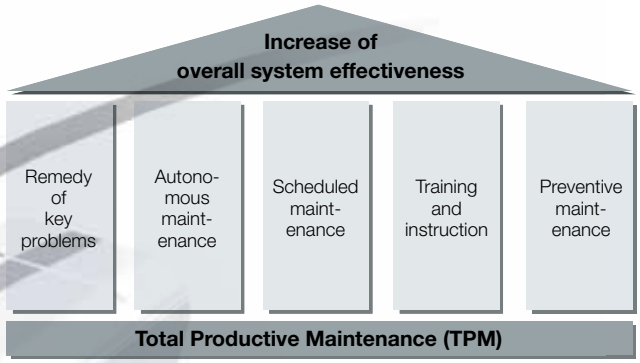

Removal of key problems
No unreliable switching, even under highest stress, due to highly precise GMR sensor elements and robust metal clamps.

Autonomous maintenance
Faster and safer sensor replacement using one sensor type for all slots with retaining switching point.

Scheduled maintenance program
The wear-free, fully electronic sensors protect against creeping failure, even after several million switching cycles, thereby increasing your process reliability.

Training and instruction
Easy handling and reduced training effort due to one sensor type for all slots with uniform operating principle of all mounting brackets.

Maintenance prevention
The costs for maintenance are already reduced to a minimum during the design with the consistent use of Balluff magnetic field sensors with mounting bracket concept.

One for all

- By selecting the right mounting bracket you can adapt these sensors to virtually every pneumatic cylinder.
- All-purpose types reduce costs and save storage space.
- BMF 303 system for miniaturized actuators
  BMF 305 system for larger actuators
  BMF 103 system for use on mini-grippers and in short-stroke cylinders.
- SA7 variants for Schunk grippers

more added value

Service Case for Position Detection at Pneumatic Cylinder

Ready for Total Productive Maintenance (TPM)

The advantages of the magnetic field sensors with a unique mounting system – all in a single case. The position of all standard pneumatic cylinders can be detected using a single product.

- Time and cost savings very time the sensor is changed
- Covers all standard pneumatic cylinders
- Clearly laid out for easy handling

	Conventional sensors	BMF service case with sensors BMF 103, 303, 305 and mounting system	
Sensor replacement			– Case has space to store all the necessary materials – Mounting system retains the switching point when device is replaced
Complexity			– Standard operating principle for all cylinders – Elementary assembly
Variety of models			– One sensor for all cylinders – Reduced storage costs
Service life			– Robust metal clamp – Fully electronic, wear-free electronics
€			**Sensors with mounting system by Balluff can reduce your costs significantly.**

- Contains detailed literature
- Particularly user-friendly due to logical table of contents
- Lid sealed tight when closed
- Contains two BMF 103, 303 and 305 sensors
- Contains two fastening elements for all common types of slot
- Robust, industrial aluminum case
- Contains an extensive range of accessories

Description	**BMF service case**
Ordering code	**BAV0005**
Part number	BAV AS-OD-00002-01

more added value

- No adjustment with standard applications
- Simple cable tie assembly on pipes
- Sensitive adjustment of the responsiveness using a potentiometer

The new capacitive BCS Uniflat sensors of the GlobalProx series provide very good performance with a switching distance of up to 20 mm in the compact plastic housing. With a well-conceived fastening design, they can be screwed on or secured with cable ties to bypass pipes.

The connection is made using a 2 m connection line or a short pigtail line and an M8 plug. The codable output function provides PNP or NPN and normally open or normally closed functionality.

GlobalProx

Capacitive Sensors BCS

GlobalProx sensors in 40×40 mm size

New

Size		**40×40×10 mm** Uniflat	**40×40×10 mm** Uniflat
Installation type		flush	flush
Rated switching distance s_n		**20 mm**	**20 mm**
PNP/NPN and normally open/ normally closed selectable	**Ordering code**	**BCS00TR**	
	Part number	BCS Q40BBAA-GPC20C-EP02	
PNP normally open	**Ordering code**		**BCS00U6**
	Part number		BCS Q40BBAA-PSC20C-EP00,3-GS49
PNP normally closed	**Ordering code**		**BCS00U5**
	Part number		BCS Q40BBAA-POC20C-EP00,3-GS49
Supply voltage U_B		10...30 V DC	10...30 V DC
Voltage drop U_d at I_e		2.5 V	2.5 V
Rated insulation voltage U_i		75 V DC	75 V DC
Output current max.		100 mA	100 mA
No-load supply current I_0 max.		15 mA	15 mA
Polarity reversal/short-circuit protected		yes/yes	yes/yes
Ambient temperature T_a		–5...+85 °C	–5...+85 °C
Switching frequency f		100 Hz	100 Hz
Output function/power-on indicator		yes/yes	yes/yes
Degree of protection as per IEC 60529		IP 67	IP 67
Material	Housing	PBT	PBT
	Sensing surface	PBT	PBT
	Cover	PBT	PBT
Connection		2 m PUR cable, 3×0.14 mm²	0.3 m PUR cable with M8 plug, 3-pin

Wiring diagram

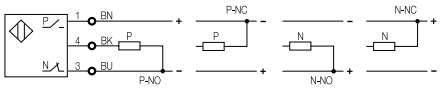

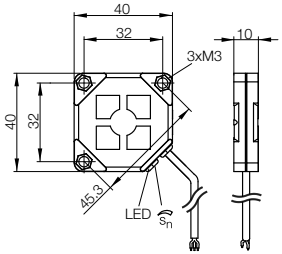

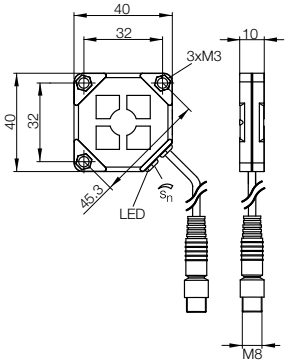

Size	**Ø 4 mm**	**M5×0.5**	**Ø 6.5 mm**	**Ø 6.5 mm**
Mounting type	Flush	Flush	Flush	Non-flush
Rated switching distance s_n	**0.1…1 mm**	**0.1…1 mm**	**0.1…1.5 mm**	**0.1…3 mm**
Ordering code	**BCS0010**	**BCS0011**	**BCS0012**	**BCS0013**
Part number	BCS G04T4D-XXS10C-EP02-GZ01-002	BCS M05T4C-XXS10C-EP02-GZ01-002	BCS G06T4B-XXS15C-EP02-GZ01-002	BCS G06T4B-XXS30G-EP02-GZ01-002
Operating voltage U_B	4…8 V DC	4…8 V DC	4…8 V DC	4…8 V DC
Rated insulation voltage U_i	75 V DC	75 V DC	75 V DC	75 V DC
Ambient temperature T_a	–30…+80 °C	–30…+80 °C	–30…+80 °C	–30…+80 °C
Switching frequency f	100 Hz	100 Hz	100 Hz	100 Hz
Degree of protection per IEC 60529	IP 67	IP 67	IP 67	IP 67
Housing material	V2A	V2A	V2A	V2A
Sensing surface material	PTFE	PTFE	PTFE	PTFE
Cover material	POM	POM	POM	POM
Connection	2 m cable PUR, 3×0.14 mm²	2 m cable PUR, 3×0.14 mm²	2 m cable PUR, 3×0.14 mm²	2 m cable PUR, 3×0.14 mm²

Refer to our catalog or visit **www.balluff.com** for a large selection of capacitive sensors

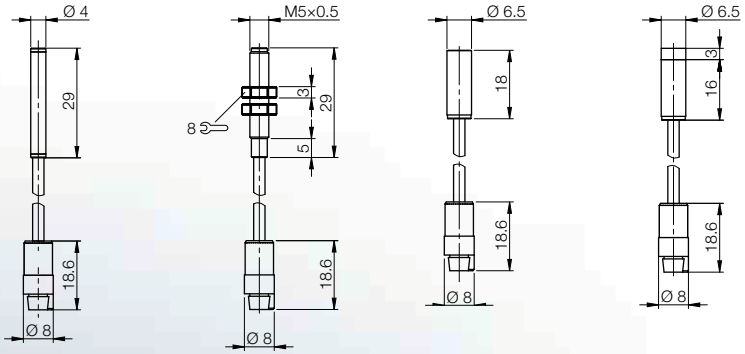

mini.S

Capacitive Mini Sensors BCS

Object detection in the smallest of spaces

M8×1	**M8×1**	**Ø 10 mm**	**Ø 10 mm**	**M12×1**	**M12×1**
Flush	Non-flush	Flush	Non-flush	Flush	Non-flush
0.1…1.5 mm	**0.1…3 mm**	**0.1…4 mm**	**1…8 mm**	**0.1…4 mm**	**1…8 mm**
BCS0014	**BCS0015**	**BCS0016**	**BCS0017**	**BCS0018**	**BCS0019**
BCS M08T4C-XXS15C-EP02-GZ01-002	BCS M08T4C1-XXS30G-EP02-GZ01-002	BCS G10T4B-XXS40C-EP02-GZ01-002	BCS G10T4C-XXS80G-EP02-GZ01-002	BCS M12T4D-XXS40C-EP02-GZ01-002	BCS M12T4D1-XXS80G-EP02-GZ01-002
4…8 V DC	4…8 V DC	4…8 V DC	4…8 V DC	4…8 V DC	4…8 V DC
75 V DC	75 V DC	75 V DC	75 V DC	75 V DC	75 V DC
–30…+80 °C	–30…+80 °C	–30…+80 °C	–30…+80 °C	–30…+80 °C	–30…+80 °C
100 Hz	100 Hz	100 Hz	100 Hz	100 Hz	100 Hz
IP 67	IP 67	IP 67	IP 67	IP 67	IP 67
V2A	V2A	V2A	V2A	V2A	V2A
PTFE	PTFE	PTFE	PTFE	PTFE	PTFE
POM	POM	POM	POM	POM	POM
2 m cable PUR, 3×0.14 mm²	2 m cable PUR, 3×0.14 mm²	2 m cable PUR, 3×0.14 mm²	2 m cable PUR, 3×0.14 mm²	2 m cable PUR, 3×0.14 mm²	2 m cable PUR, 3×0.14 mm²

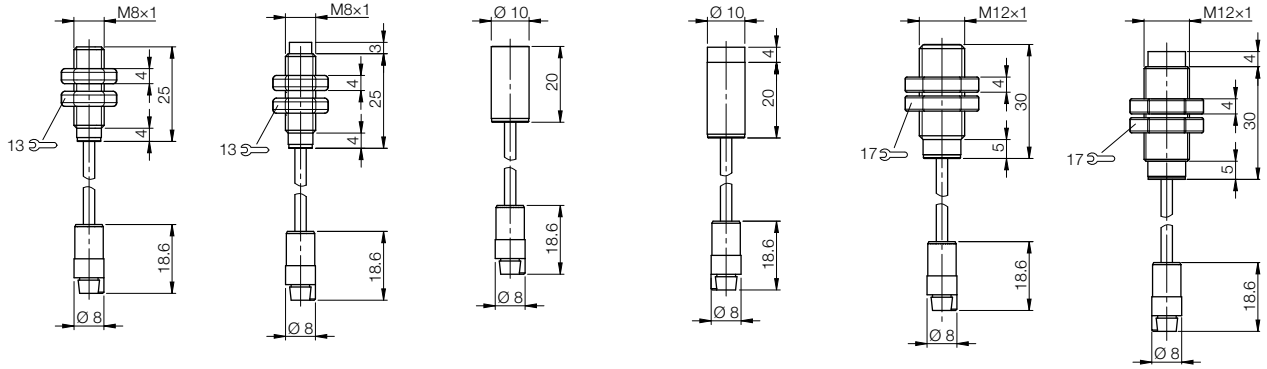

Size	**Ø 18×2.5 mm**	**Ø 18×4 mm**	**Ø 18×10 mm**	**Ø 22×4 mm**
Mounting type	Flush	Flush	Flush	Flush
Rated switching distance s_n	**0.1…3 mm**	**1…5 mm**	**1…5 mm**	**1…10 mm**
Ordering code	**BCS001A**	**BCS001C**	**BCS001E**	**BCS001F**
Part number	BCS D18T403-XXS30C-EP02-GZ01-002	BCS D18T404-XXS50C-EP02-GZ01-002	BCS D18T407-XXS50C-EP02-GZ01-002	BCS D22T405-XXS10C-EP02-GZ01-002
Operating voltage U_B	4…8 V DC	4…8 V DC	4…8 V DC	4…8 V DC
Rated insulation voltage U_i	75 V DC	75 V DC	75 V DC	75 V DC
Ambient temperature T_a	–30…+70 °C	–30…+80 °C	–30…+80 °C	–30…+80 °C
Switching frequency f	100 Hz	100 Hz	100 Hz	100 Hz
Degree of protection per IEC 60529	IP 66	IP 66	IP 66	IP 66
Housing material	V2A	V2A	V2A	V2A
Sensing surface material	PTFE	PTFE	PTFE	PTFE
Connection	2 m cable PVC, 3×0.09 mm²	2 m cable PUR, 3×0.14 mm²	2 m cable PUR, 3×0.14 mm²	2 m cable PUR, 3×0.14 mm²

Refer to our catalog or visit **www.balluff.com** for a large selection of capacitive sensors

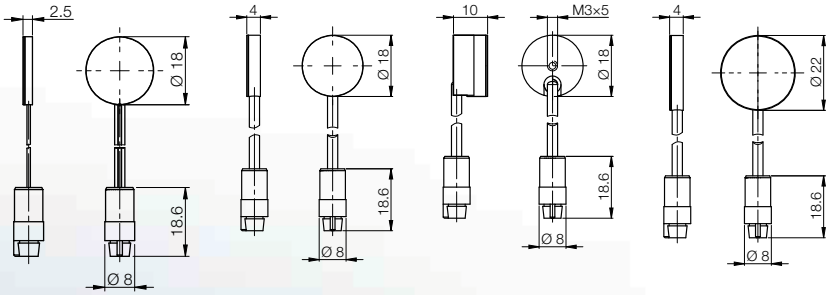

mini.S

Capacitive Mini Sensors BCS

Object detection in the smallest of spaces

Ø 22×10 mm	**Ø 30×4 mm**	**Ø 30×10 mm**
Flush	Flush	Flush
1…10 mm	**1…15 mm**	**1…15 mm**
BCS001H	**BCS001J**	**BCS001K**
BCS D22T408-XXS10C-EP02-GZ01-002	BCS D30T406-XXS15C-EP02-GZ01-002	BCS D30T409-XXS15C-EP02-GZ01-002
4…8 V DC	4…8 V DC	4…8 V DC
75 V DC	75 V DC	75 V DC
–30…+80 °C	–30…+80 °C	–30…+80 °C
100 Hz	100 Hz	100 Hz
IP 66	IP 66	IP 66
V2A	V2A	V2A
PTFE	PTFE	PTFE
2 m cable PUR, 3×0.14 mm²	2 m cable PUR, 3×0.14 mm²	2 m cable PUR, 3×0.14 mm²

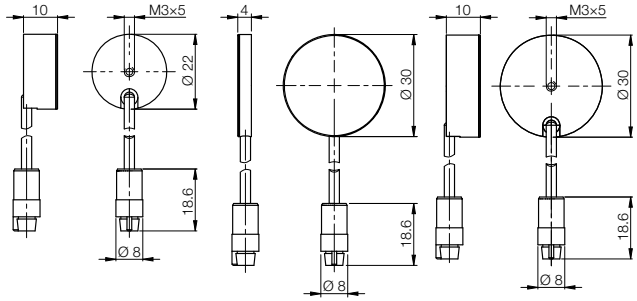

Size			**45×30×15 mm**
PNP	NO	**Ordering code**	**BAE009E**
		Part number	BAE SA-CS-001-PS
PNP	NC	**Ordering code**	**BAE009F**
		Part number	BAE SA-CS-001-PO
NPN	NO	**Ordering code**	**BAE009H**
		Part number	BAE SA-CS-001-NS
NPN	NC	**Ordering code**	**BAE009J**
		Part number	BAE SA-CS-001-NO
Operating voltage U_B			12…35 V DC
Voltage drop U_d at I_e			0.8 V
Rated insulation voltage U_i			75 V DC
Output current max.			300 mA
No-load supply current I_0 max.			20 mA
Reverse polarity/short-circuit protected			Yes/yes
Ambient temperature T_a			–30…+70 °C
Switching frequency f			100 Hz
Function indicator			Yes/yes
Degree of protection per IEC 60529			IP 67
Housing material			PC
Connection			2 m cable PUR, 3x0.14 mm²

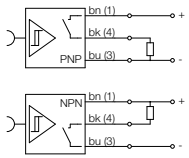

Function overview
LED 1: Switching status indicator
LED 2: Power indicator
Pos. 1: Through-hole dia. 4.2 mm, hexagon on both sides for inserting an M3 nut.

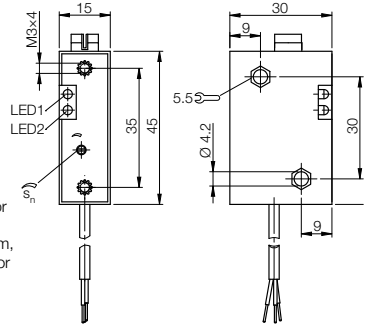

Balluff is extending its series of ultrasonic sensors by a sensor in the closed stainless steel housing in the designs M30×1.5 and Ø 30 mm. The ultrasonic converter is protected by the metal wall which, for the first time, guarantees a protection level of IP 68/IP 69K and opens up a wealth of new possibilities even under the harshest ambient conditions. The robust stainless steel sensing surface protects the sensor against aggressive cleaning products such as those used in the packaging and food industry.

- Extremely rugged and reliable
- Large range up to 1.5 m
- High degree of protection IP 68/IP 69K

more added value

New: Steelface Ultrasonic Sensors

For the most extreme applications in harsh environments

Coming soon

Ultrasonic sensors for object detection

Size			**M30×1.5**	**Ø 30 mm**
Range			150...1500 mm	150...1500 mm
PNP	NO with Teach-in	**Ordering code**	**BUS001R**	**BUS001Y**
		Part number	BUS M30E0-PSXDR-150-S92G-S	BUS G30E0-PSXDR-150-S92G-S
PNP	NC with Teach-in	**Ordering code**	**BUS001T**	**BUS001Z**
		Part number	BUS M30E0-POXDR-150-S92G-S	BUS G30E0-POXDR-150-S92G-S
Operating voltage U_B			24 V DC ±25 %	24 V DC ±25 %
Ambient temperature T_a			–15…+80 °C	–15…+80 °C
Switching frequency f			7 Hz	7 Hz
Degree of protection per IEC 60529			IP 68/IP 69K	IP 68/IP 69K
Ultrasonic frequency, dispersion cone angle			220 kHz, 8°	220 kHz, 8°
Resolution			1 mm	1 mm
Housing/sensing surface material			Stainless steel 1.4571	Stainless steel 1.4571
Connection			M12 connector	M12 connector

Ultrasonic sensors for analog distance measurement

Size			**M30×1.5**	**Ø 30 mm**
Measuring range			150...1500 mm	150...1500 mm
Analog output 0...10 V DC		**Ordering code**	**BUS001N**	**BUS001U**
		Part number	BUS M30E0-XADX-150-S92G-S	BUS G30E0-XADX-150-S92G-S
Analog output 4...20 mA		**Ordering code**	**BUS001P**	**BUS001W**
		Part number	BUS M30E0-XBDX-150-S92G-S	BUS G30E0-XBDX-150-S92G-S
Operating voltage U_B			24 V DC ±25 %	24 V DC ±25 %
Ambient temperature T_a			–15…+80 °C	–15…+80 °C
Degree of protection per IEC 60529			IP 68/IP 69K	IP 68/IP 69K
Ultrasonic frequency/dispersion cone angle			220 kHz, 8°	220 kHz, 8°
Resolution			1 mm	1 mm
Output curve deviation max.			0.5 %	0.5 %
Characteristic slope			7.4 mV/mm or 11.8 µA/mm	7.4 mV/mm or 11.8 µA/mm
Housing/sensing surface material			Stainless steel 1.4571	Stainless steel 1.4571
Connection			M12 connector	M12 connector

Linear
Position Sensing

High-pressure Inductive Sensors
Inductive Positioning System
Magnetically Coded
Position and Angle Measurement System
Micropulse Transducers

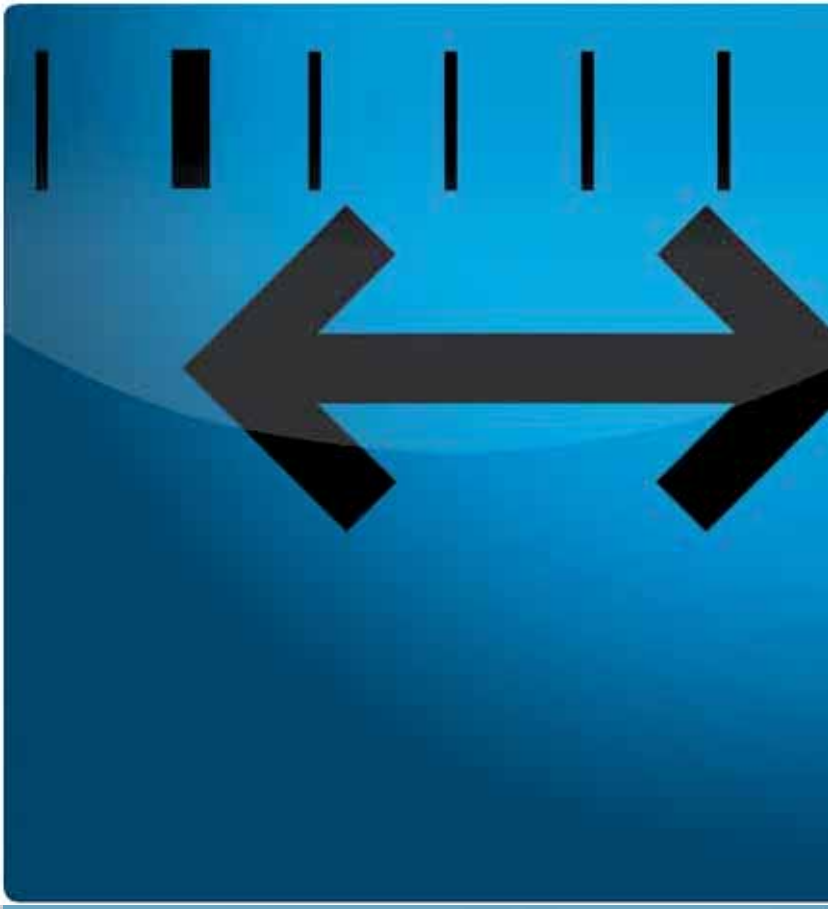

more added value

- One design – two output models
- Switching for final position detection
- Analog for control of valves or immediate stop
- Measurements of valves and cylinders possible
- Ceramic on medium side – robust
- Oil pressure up to 500 bar

Application areas

- Control of valves
- Parked position of cranes
- Final position of installation supports
- Service measurements of valves
- Position monitoring in mobile hydraulic systems
- Control of agricultural technology

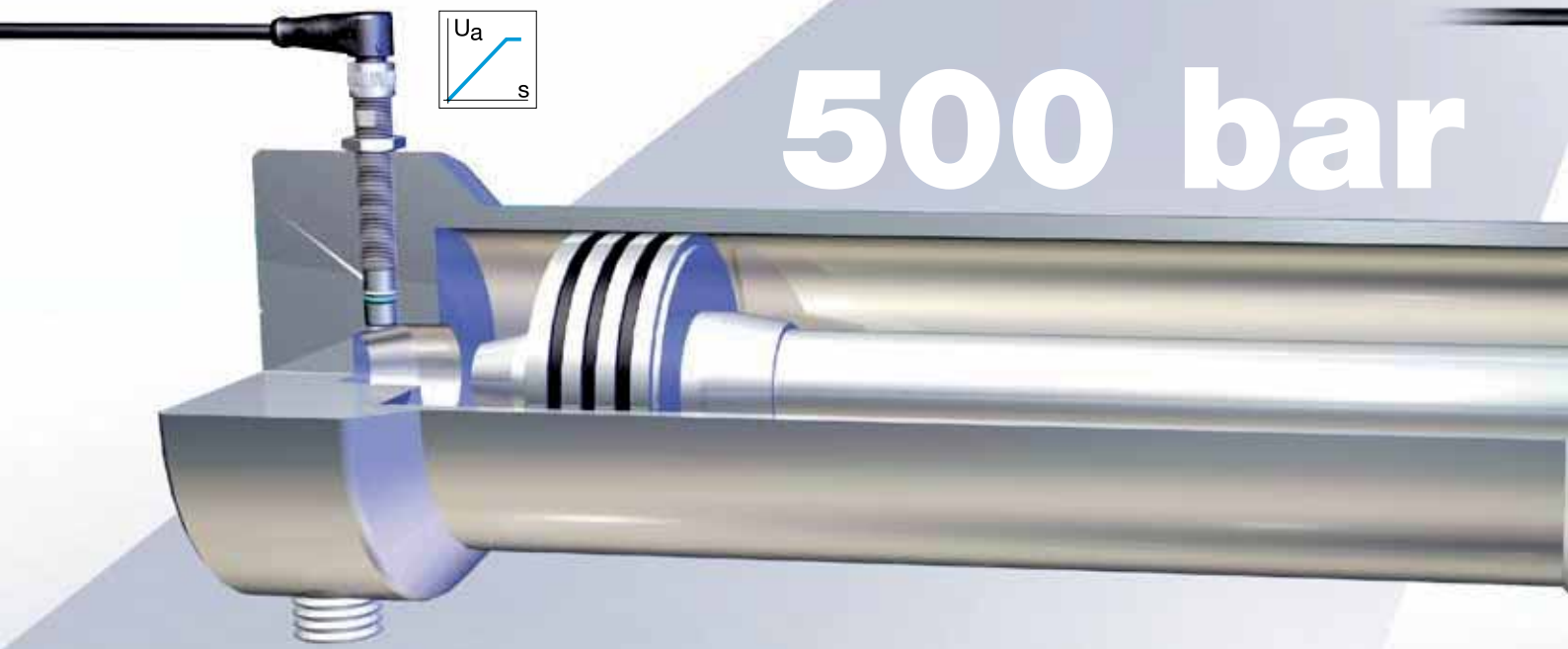

500 bar

High-pressure Inductive Sensors

Switching or analog up to 500 bar

Size	**M12×1**	**M12×1**
Mounting type	Flush	Flush
Rated switching distance s_n	**1.5 mm**	
Ordering code	**BHS0076**	**BAW0040**
Part number	BHS B135V-PAD15-S04-007	BAW Z08EO-UAD20B-S04G-H11
Output signal	PNP complementary	0...10 V
Detection range		0.5...2 mm
Operating voltage U_B	12...36 V DC	10...30 V DC
Ambient temperature range	–25...+85 °C	–25...+85 °C
Sensor degree of protection per IEC 60529	IP 68	IP 68
Housing material	Stainless steel	Stainless steel
Material of sensing face	Ceramic	Ceramic
Connection	M12 connector	M12 connector
High pressure rated to	**500 bar**	**500 bar**

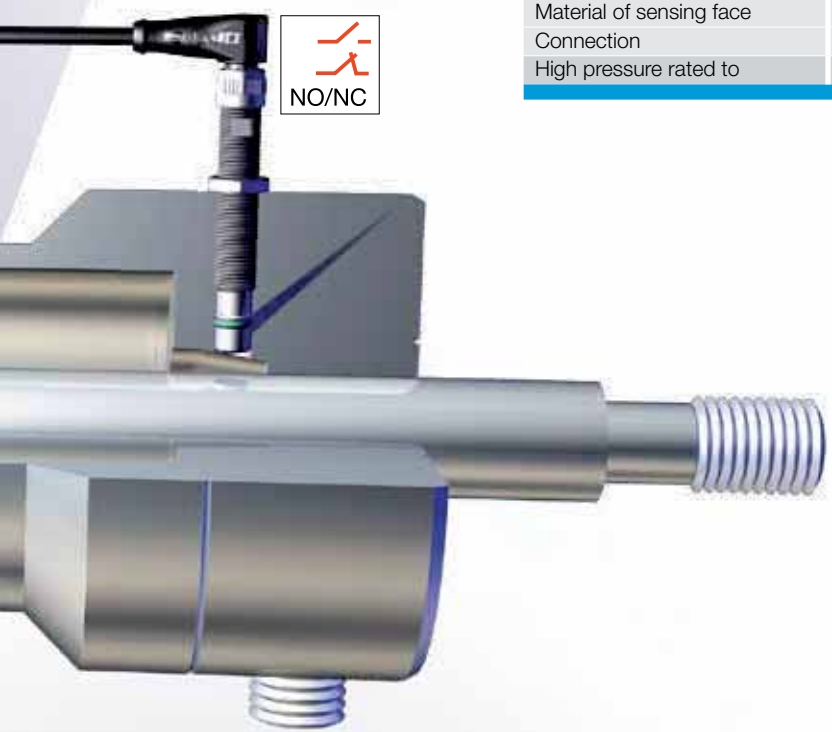

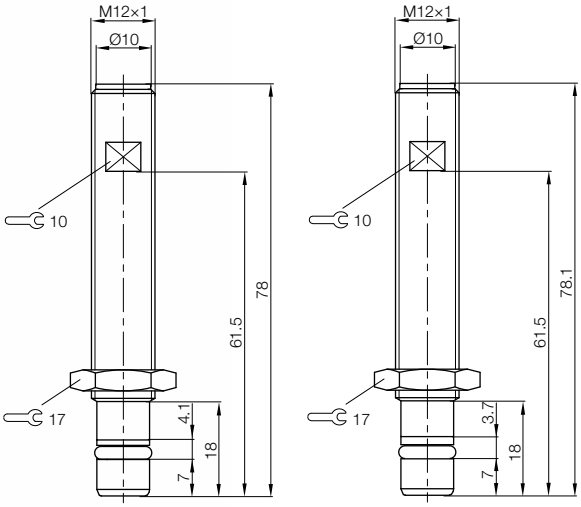

more added value

- Absolute measuring principle, several measuring ranges, teachable
- High level of repeat accuracy and precision
- Optimal linearity and low temperature drift
- Optimized housing design for clamping distance monitoring
- Distance-proportional IO-Link output signal
- Standard output 0...10 V, 4...20 mA

The inductive positioning system BIP is the accurate measuring system for the position detection of metallic objects.

Applications
The main application area of the BIP is the linear position monitoring of drive spindles and clamping devices for tools and workpieces.

CE
IO-Link

Ordering code	
Part number	
Output signal	
Length of measuring range is teachable	
Detection range	
Target width (EC80)	
Target distance	
Resolution	
Repeat accuracy	
Non-linearity	
Ambient temperature range	
Connection	
Supply voltage	
Housing material	
Function indicator LED	

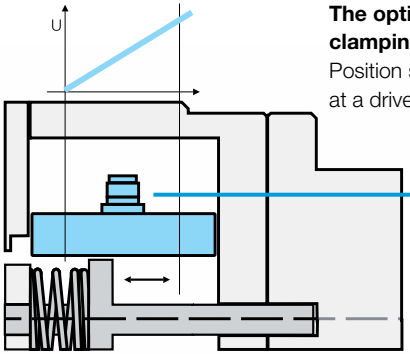

The optimal sensor for clamping distance monitoring
Position sensor BIP in use at a drive spindle for tools.

Inductive Positioning System BIP

Perfectly integratable

	BIP0001	BIP0007	BIP0008	BIP0002	BIP0004	BIP0005
	BIP AD0-B014-01-EP02	BIP LD2-T014-01-EP02	BIP CD2-B014-01-EP02	BIP AD2-B040-02-S4	BIP LD2-T040-02-S4	BIP CD2-B040-02-S4
	0...10 V	IO-Link	4...20 mA	0...10 V	IO-Link	4...20 mA
	7...14 mm			20...40 mm		
	0...14 mm			0...40 mm		
	8 mm			14 mm		
	0.5...2 mm			1...3 mm		
	14 µm			40 µm		
	±80 µm			±80 µm		
	±250 µm			±400 µm		
	–25...+70 °C			–25...+85 °C		
	2 m cable			M12 connector		
	15...30 V (IO-Link 18...30 V)			15...30 V (IO-Link 18...30 V)		
	PA			PA		
	Yes			Yes		

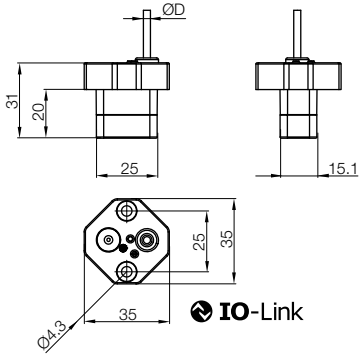

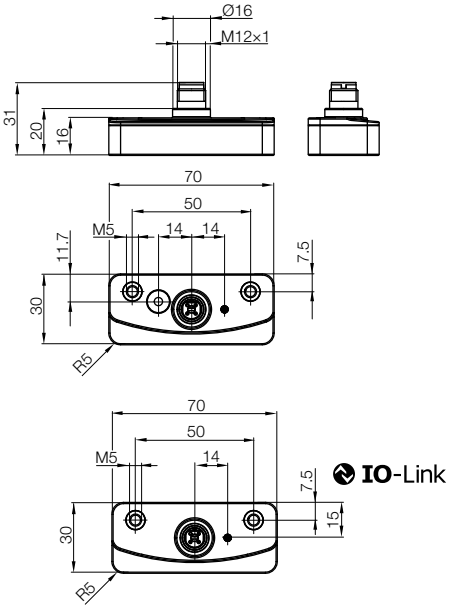

more added value

- Absolute measuring principle, several measuring ranges, teachable
- High level of repeat accuracy and precision
- Wide working temperature range and low temperature drift
- Optimized housing design, degree of protection IP 67
- Standard output 0...10 V, 4...20 mA

The inductive positioning system BIP is the accurate measuring system for the position detection of metallic objects.

Applications
These BIP positioning systems are ideal for integrated production monitoring because their unmatched effective length ratio makes installation in the tightest of applications possible.

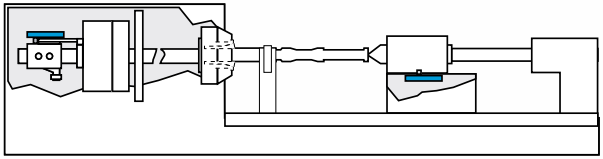

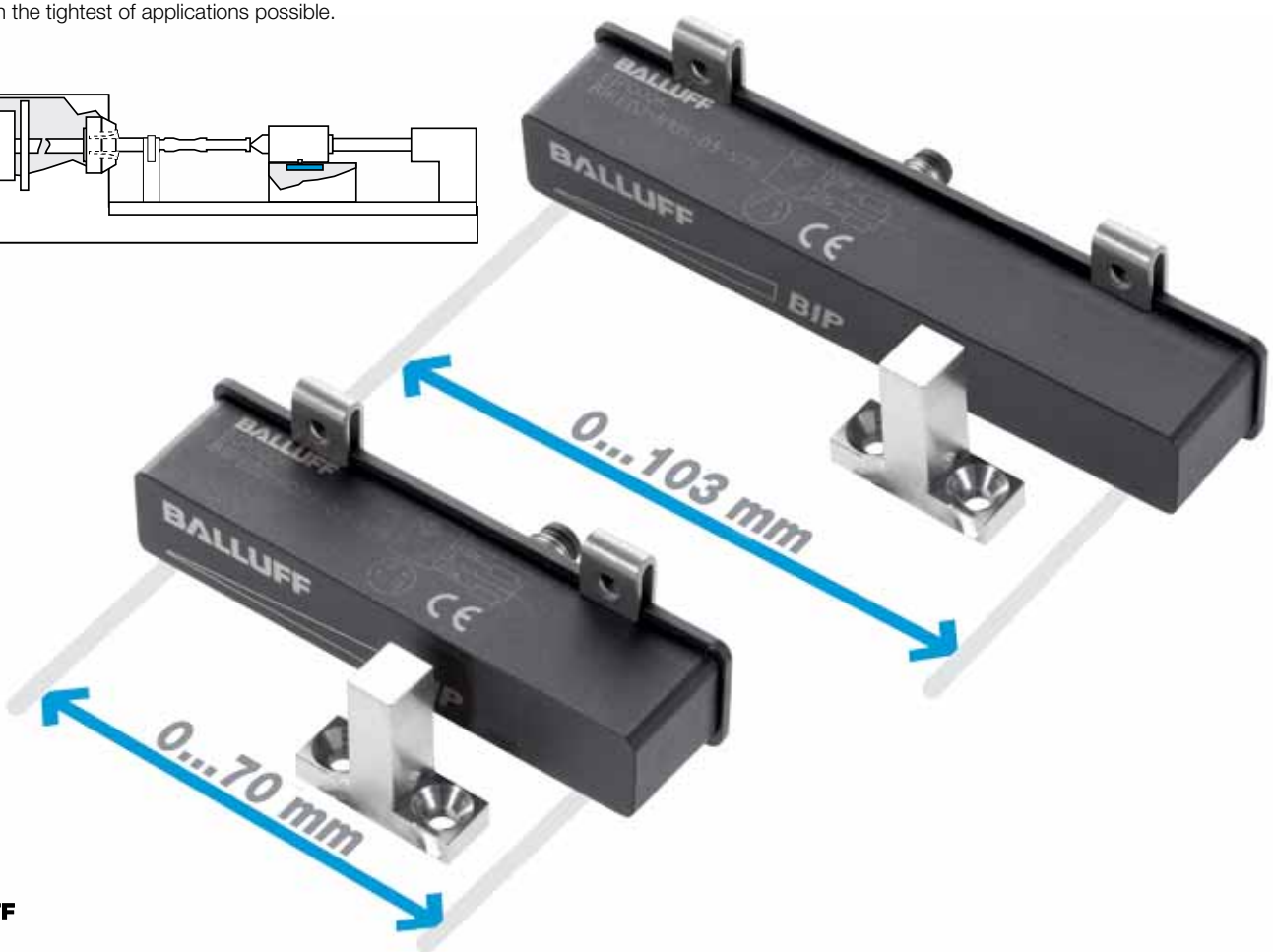

Inductive Positioning System BIP

Optimized effective length

teachable

teachable

Ordering code	BIP000C	BIP000E
Part number	BIP ED2-B070-03-S75	BIP ED2-B103-03-S75
Output signal	0...10 V and 4...20 mA	0...10 V and 4...20 mA
Length of measuring range is teachable	35...70 mm	51.5...103 mm
Detection range	0...76.5 mm	0...105 mm
Target width (EC80)	8 mm	8 mm
Target distance	1...3 mm	1...3 mm
Resolution	80 µm	80 µm
Repeat accuracy	±80 µm	±80 µm
Non-linearity	±300 µm	±400 µm
Ambient temperature range	–25...+85 °C	–25...+85 °C
Connection	M8 connector	M8 connector
Supply voltage	16...30 V	16...30 V
Housing material	PBT	PBT
Function indicator LED	Yes	Yes

Please order **Metal Target** separately.
Type designation: BAM TG-XE-001
Ordering code: BAM01CP

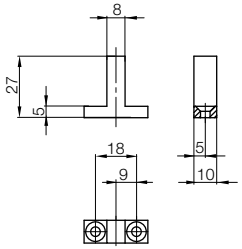

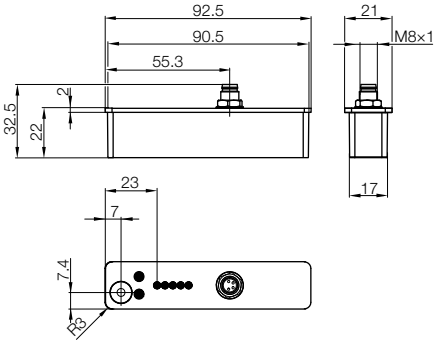

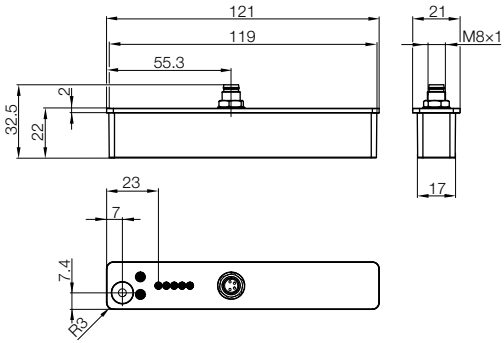

Two fastening clips incl. screws
are included in the delivery.

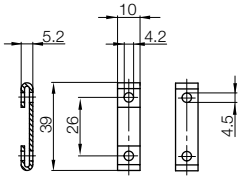

more added value

- Absolute measuring system for short strokes
- High system accuracy and resolution
- Mountable lengthwise or crosswise to the tape
- Tiny design in a robust metal housing

Inaccuracy and tolerance shifts have a negative effect on production quality. The solution: direct measuring systems detect the current position directly on the carriage or the load support.
The new BML-S1H magnetically coded position and angle measurement system measures highly dynamic applications exactly and absolutely. As a result, external factors such as dirt, wear, and temperature have a much smaller impact.
Frequent applications are linear guidance systems, pick and place, drive feedback and vibration wear.

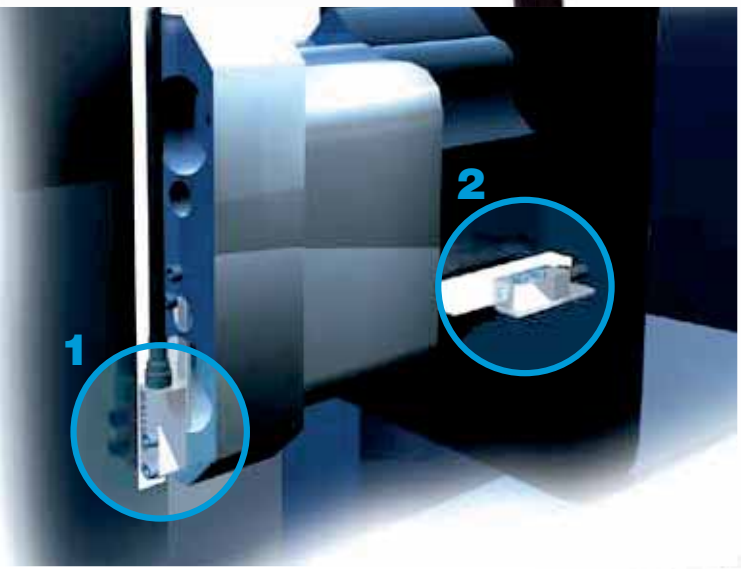

BML-S1H Magnetically Coded Position and Angle Measurement System

Absolute precision

New

Model		BML-S1H...	BML-S1H...
Output signal		Absolute: SSI interface, Analog signal: sin/cos, 1 V_{ss}	Absolute: SSI interface, Analog signal: sin/cos, 1 V_{ss}
Data format		16-bit	18-bit
Max. measuring length		64 mm	256 mm
Lengthwise approach direction	**Ordering code**		
	Part number	BML-S1H1-S6QC-M3AA-D0-KA00,3-S284	BML-S1H1-S6QC-M3CA-D0-KA00,3-S284
Crosswise approach direction	**Ordering code**		
	Part designation	BML-S1H2-S6QC-M3AA-D0-KA00,3-S284	BML-S1H2-S6QC-M3CA-D0-KA00,3-S284
Resolution		1/1.024 µm per LSB	1/1.024 µm per LSB
Repeat accuracy		≤ 1 µm	≤ 1 µm
System accuracy		±7 µm	±7 µm
Supply voltage		5 V ±5 %	5 V ±5 %
Current consumption		< 90 mA + Controller current consumption, at 120 Ω load resistance	< 90 mA + Controller current consumption, at 120 Ω load resistance
Tape pole pitch		1 mm	1 mm
Max. read distance, sensor head/measuring body		0.35 mm (without cover strip)	0.35 mm (without cover strip)
Max. travel speed		5 m/s	5 m/s
Sampling rate		$f_{Standard}$ = 2 kHz (SSI interface)	$f_{Standard}$ = 2 kHz (SSI interface)
SSi clock frequency		f_{Clk} = 10 kHz...4 MHz	f_{Clk} = 10 kHz...4 MHz
Operating temperature		–20 to +80 °C	–20 to +80 °C
Housing material		Al	Al
Degree of protection as per IEC 60529		IP 67	IP 67

Devices are also available with the BiSS-C interface.

Accessories: M12 connection cable with cable length of 5 m (Ordering code: **BCC09MY**)

Model	Magnetic Tape	Magnetic Tape
Output signal	for BML-S1H with 64 mm measuring length	for BML-S1H with 256 mm measuring length
Ordering code		
Part number	BML-M02-A33-A3-M0009-A	BML-M02-A33-A3-M0028-C
Length	90 mm	280 mm
Measuring length	64 mm	256 mm
Magnetic tape material	Rubber ferrite	Rubber ferrite
Cover strip material	Stainless steel	Stainless steel

more added value

New

BTL7 redundant micropulse transducers

BTL7 redundant micropulse transducers: the robust position measuring system for use in safety-related valves and hydraulic cylinders for measuring ranges between 25 and 7620 mm.
Up to 3 independent position measuring systems in the same housing enable fail-safe linear measurement of, for example, safety valves or the combined monitoring of position and adjustment speed.

- Safety function easily retrofitted
- Flexibility in the safety concept; selectable redundancy: 2 or 3 times redundant
- Machine design can be maintained
- Quick commissioning, characteristics configurable over the entire measuring range
- Diagnostics LEDs enable optimal overview of every active channel
- Non-contact and wear-free

Model	BTL7 rod
Shock rating	100 g/6 ms as per IEC 60068-2-27
Vibration	12 g, 10 to 2000 Hz as per IEC 60068-2-6
Polarity reversal protected	to 36 V
Surge protected	to 36 V
Dielectric strength	500 V AC (GND to housing)
Degree of protection as per IEC 60529	IP 67
Housing material	Aluminum anodized/protective tube stainless 1.4571, flange stainless 1.4571
Fasteners	Model: TB thread M18×1.5 Model: TZ thread 3/4"-16UNF Model: TT thread M30×1.5 Model: TK connecting flange 18h6 with 6 cheese head screws
Pressure rating with 10.2 mm protective tube	600 bars if installed in a hydraulic cylinder up to 2000 mm in rated length 300 bars if installed in hydraulic cylinder >2000 mm rated length
Pressure rating with 21 mm protective tube	250 bars if installed in hydraulic cylinder up to 2000 mm rated length
Connection type	Connector or cable connection
EMC testing:	
Radio interference emission	EN 55016-2-3 Group 1, Class A and B
Static electricity (ESD)	EN 61000-4-2 Severity level 3
Electromagnetic fields (RFI)	EN 61000-4-3 Severity level 3
Rapid, transient electrical pulses (burst)	IEC 61000-4-4 Severity Level 3
Surge voltage	EN 61000-4-5 Severity level 2
Conducted interference, induced by high-frequency fields	EN 61000-4-6 Severity level 3
Magnetic fields	EN 61000-4-8 Severity level 4
Standard rated lengths [mm]	in 5 mm increments up to 7620 mm or in 1 mm increments on request

Redundant Rod Series

Secure and compact

Properties of Micropulse BTL7-A/C/E/G...TB/TZ/TT/TK

- Non-contact detection of piston position
- Resistant to dirt, IP 67
- Shock and vibration resistant 100 g/12 g
- Absolute output signal
- Measurement lengths 25 to 7620 mm in mm increments
- Flexibly configurable measuring range through PC programming
- Status LED to indicate the operating status
- Temperature range –40 to +85 °C
- 2 or 3 times redundant

Flexible measuring range

The start and end point of the measuring range can be adapted flexibly to the application. The configuration is done by remote function.
The output signal for the position indicator or the movement speed can be set just as conveniently. Existing configured settings can easily be copied redundantly to the remaining measuring channels of the BTL7, if desired.

BTL7-_5_ _-M_ _ _ _-_ _-_ _ _ _

Micropulse transducers

Analog interface
A = Voltage output 0 to 10 V or 10 to 0 V (factory settings)
C = Current output 0 to 20 mA or 20 to 0 mA (factory settings)
E = Current output 4 to 20 mA or 20 to 4 mA (factory settings)
G = Voltage output –10 to 10 V or 10 to –10 V (factory settings)

Output gradient
04 = 1 rising output, configurable
05 = 1 falling output, configurable

Rated length (4-digit)
M = metric values in mm

Rod version, fastener
TB2 = metric mounting thread M18×1.5, O-ring, rod diameter 10.2 mm, 2 times redundant
TZ2 = inch thread 3/4"-16UNF, O-ring, rod diameter 10.2 mm, 2 times redundant
TT2 = metric mounting thread M30×1.5, O-ring, rod diameter 21 mm, 2 times redundant (successor to BTL5-...-T-2)
TK2 = connecting flange 18h6, with 6 cheese head screws, O-ring, rod diameter 10.2 mm, 2 times redundant

TB3 = metric mounting thread M18×1.5, O-ring, rod diameter 10.2 mm, 3 times redundant
TZ3 = inch thread 3/4"-16UNF, O-ring, rod diameter 10.2 mm, 3 times redundant
TT3 = metric mounting thread M30×1.5, O-ring, rod diameter 21 mm, 3 times redundant (successor to BTL5-...-T-3)
TK3 = connecting flange 18h6, with 6 cheese head screws, O-ring, rod diameter 10.2 mm, 3 times redundant

Electrical connection
S32 = 8-pin, M16 plug according to IEC 130-9
S135 = 6-pin, M16 plug according to IEC 130-9
KA05 = 5 m cable, PUR

Please order position encoder/ float separately!

Position encoder
BTL rod

Ordering code	BAM013L	BAM013Y	BAM013J	BAM013R
Part number	BTL-P-1013-4R	BTL-P-1028-15R	BTL-P-1012-4R	BTL-P-1014-2R
Size	Ø32	Ø65	Ø25	Ø21.9

Positioning extremely heavy bridge sections accurate to the millimeter

Bridge sections are usually assembled on land to minimize the obstruction of shipping traffic on rivers. After assembly, these sections are lowered horizontally onto floating pontoons in the river, moved into place, raised to the future road level and secured in position. Special heavy-duty hydraulic cylinders with integrated Micropulse displacement systems guide the horizontal feed and vertical lifting movements. The integrated Micropulse displacement systems ensure that the heavy bridge sections are positioned synchronously and accurate to the millimeter.

Applications
Structural design and calculations

- Active support of walls
- Bridge positioning and lifting technology
- Leveling structures
- Off-shore sector
- Tunnel construction

Industry applications

- Pumps and compressors
- Lift and lifting technology
- Forging presses
- High-pressure hydraulics

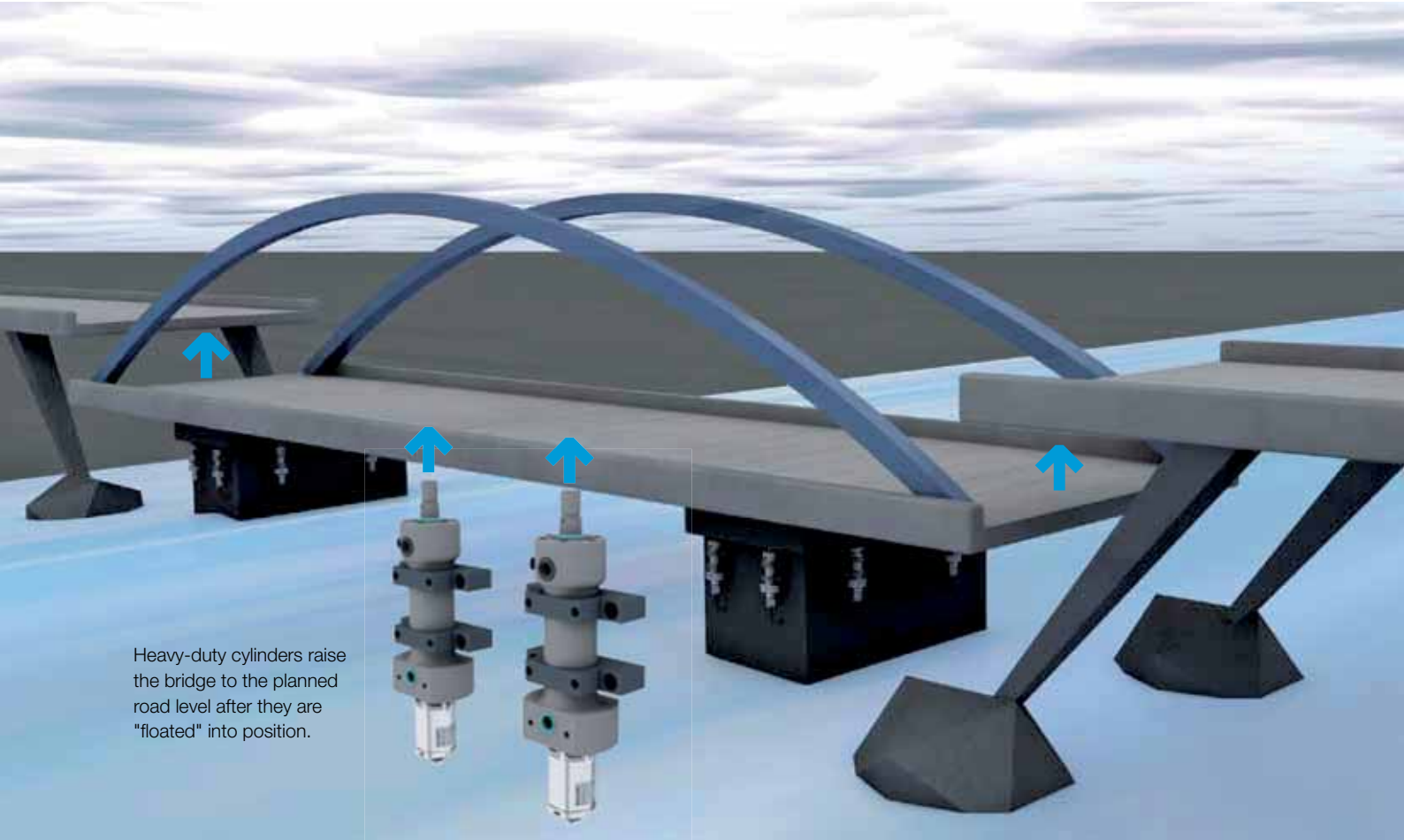

Heavy-duty cylinders raise the bridge to the planned road level after they are "floated" into position.

Micropulse Transducers BTL5-CD

High-pressure transducers resistant to 1000 bar make it easy for the heavy-duty cylinders

Micropulse CD transducers ensure that extreme loads are moved steadily and with precision. They are based on the established magnetostrictive distance measurement technology. The absolute, contact-free principle is suitable for the reliable, high-precision and dynamic measurement of piston positions on hydraulic cylinders. The special flange and protective pipe design as well as the extremely robust stainless steel material make the Micropulse CD transducers ideal for installation as a feedback system in high-pressure and heavy-duty cylinders.

Features

- For pressures up to 1000 bar
- Measuring lengths 25...2000 mm
- Resolution down to 1 µm
- Degree of protection IP 67/68
- Temperature range –40...+85 °C
- Hazardous area Zone 2; protection type "nA"
- Plug or cable variants
- Multi-magnet technology

more added value

1000 bar

BTL5-CD variants	
Part number	**Analog output signal**
BTL7-E/C...-CD-...	Current
BTL7-A/G...-CD-...	Voltage
BTL7-E/C...-CD-NEX...	Current Ex "nA"
BTL7-A/G...-CD-NEX...	Current Ex "nA"
	Digital interface
BTL5-P/M...-CD-...	P pulse interface
BTL7-S...-CD-...	SSI
	Fieldbuses
BTL5-T...-CD-...	PROFIBUS
BTL5-H...-CD-...	CANopen
	Ethernet
BTL6-V11V-CD-...	Varan
BTL6-V11E-CD-...	EtherCAT
	Accessories
BTL-P-1018-3R	Encoder ring

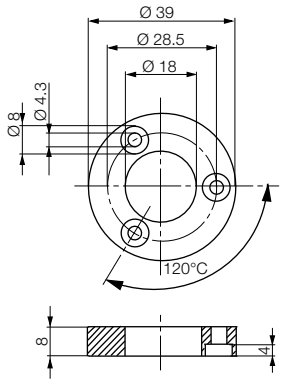

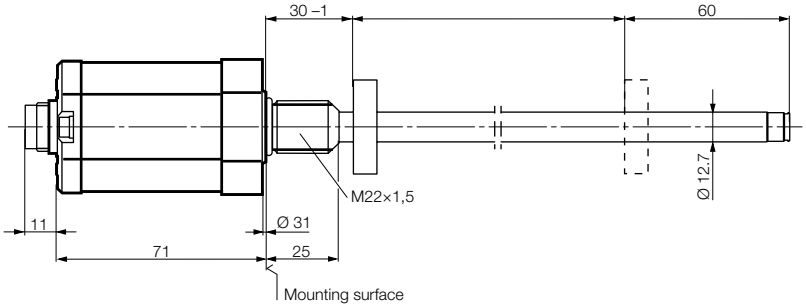

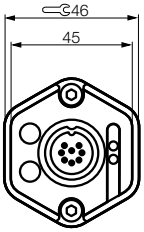

more added value

Micropulse ProCompact with cable protection system
Extreme ambient conditions, in which high reliability together with accuracy is required, are typical application areas for Micropulse ProCompact transducers.
The non-contact working principle of the systems ensures a complete absence of wear and nearly endless service life. The high-precision output signal serves as an absolute signal for the controller in a wide range of different interfaces.

Areas of application
- Locks and floodgates
- River power plants
- Large hydraulically powered valves
- Monitoring reflection channels on thermosolar power plants
- Sand dredgers
- Track systems
- Logging machines
- Hydroelectric power plants
- Construction equipment
- Combines

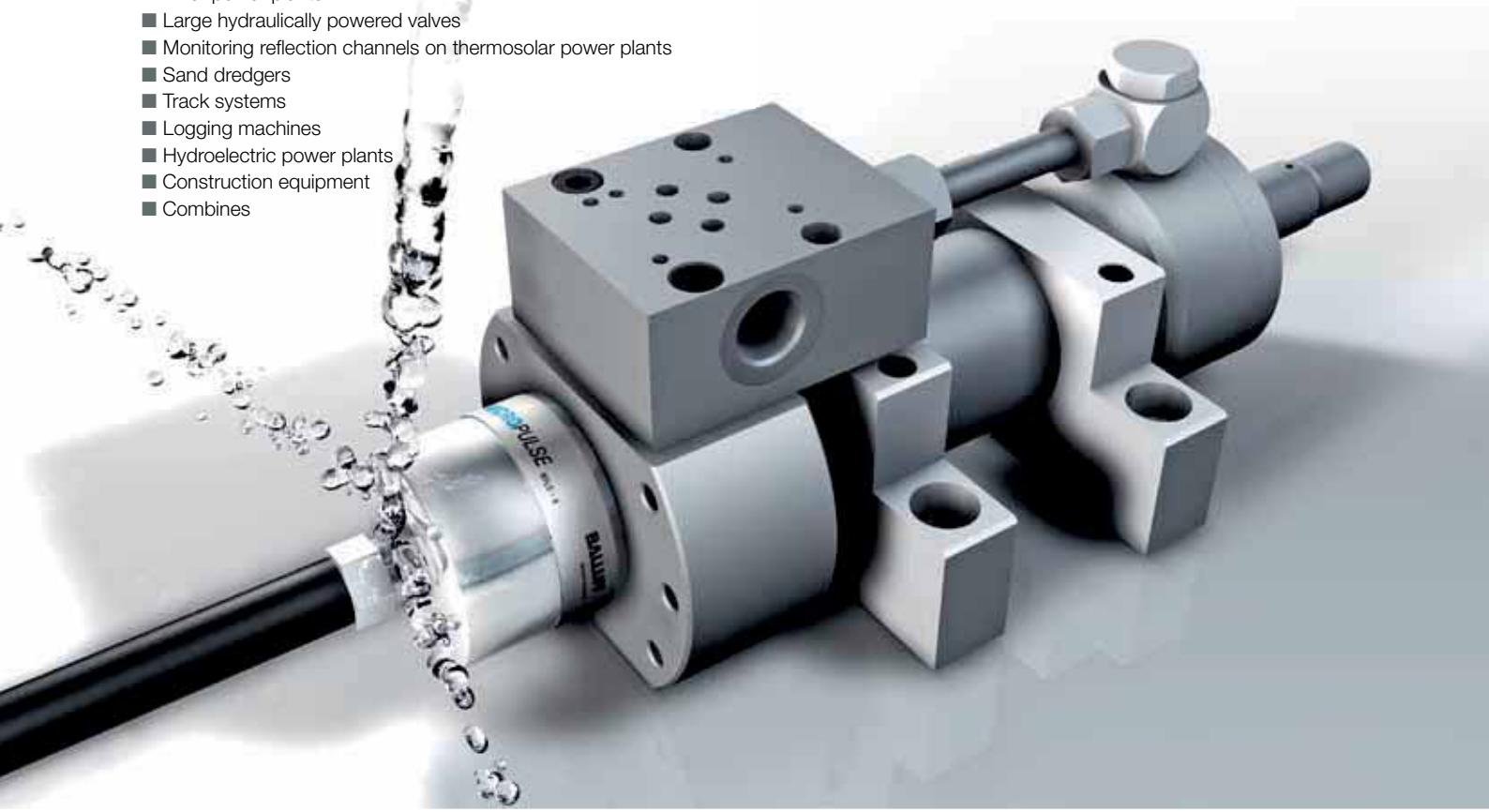

Micropulse Transducers BTL ProCompact

The cylinder feedback system for extreme environments

Model	BTL5 Pro Compact HB/WB rod
Part number/output signal	BTL5-A11-M...-HB/WB-...-C/analog 0 - 10 V
Part number/output signal	BTL5-E1-M...-HB/WB-...-C/analog 4 - 20 mA
Part number/output signal	BTL5-C1-M...-HB/WB-...-C/analog 0 - 20 mA
Part number/output signal	BTL5-G11-M...-HB/WB-...-C/analog –10 - 10 V
Part number/output signal	BTL5-P1-M...-HB/WB-...-C/digital pulse
Part number/output signal	BTL5-S1-M...-HB/WB-...-C/digital SSI
Part number/output signal	BTL5-H1-M...-HB/WB-...-C/BUS CANopen
Shock rating	100 g/6 ms as per IEC 60068-2-27 and 100 g/2 ms as per IEC 60068-2-29
Vibration	12 g, 10...2000 Hz as per IEC 60068-2-6
Degree of protection per IEC 60529	IP 68 (5 bar with cable); IP 69K (with cable protection system); IP 68 (40 bar with cable protection system BAM AD/PT)
Housing material	Stainless steel 1.4404
Flange and tube material	Stainless steel tube 1.4571, flange 1.4404
Operating temperature	–40...+85 °C
Storage temperature range	–40...+100 °C
Cable connection type	PTFE/–40...+200 °C
Standard nominal lengths [mm]	0025...5080 or in 1-mm increments on request.

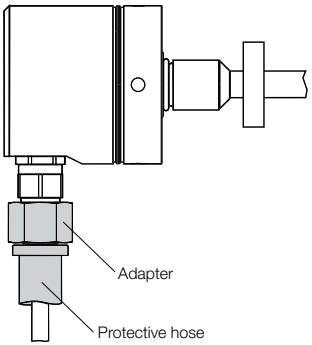

Model	Adapter
Ordering code	**BAM01JW**
Part number	BAM AD-XA-007-M18×1.5/D12-2
Housing material	Brass (not seawater-resistant)
Ordering code	**BAM01JY**
Part number	BAM AD-XA-007-M18×1.5/D12-4
Housing material	Stainless steel V2A (conditionally seawater-resistant)
Model	**Protective tube**
Part number	BAM PT-XA-001-095-0-_ _ _
Tube length	02, 05, 10, 15, 20, 30, 50 and 100 m
Degree of protection	IP 68 (40 bar) IP 69K (when installed and attached)
Housing material	PUR (resistant to seawater, weld spatter and UV radiation)
Outside diameter	16 mm
Inside diameter	9.5 mm
Temperature range	–40...+95 °C
Min. bending radius (static)	51 mm

more added value

Features

- Non-contact detection of piston position
- Insensitive to contamination, up to IP 68
- Shock- and vibration resistant 150 g/20 g
- Absolute output signal
- Measurement lengths 25 to 7620 mm in mm increments
- Flexibly adjustable measuring range through key programming
- High measured value rate up to 4 KHz
- Temperature range –40 to +85 °C

BTL Compact – the standard in power plant and process engineering

As early as 1995 at the Hanover trade fair, Balluff, as the first manufacturer of magnetostrictive distance measurement systems, presented the BTL Compact with a length of only 34 mm as a trade fair innovation. The target applications were hydraulically actuated valve drives in power plant and process engineering. In the meantime, thousands of BTL Compacts all over the world reliably measure the current position of valves and guarantee safe, dependable and perfect control. Balluff is once again setting standards with the new generation, the Micropulse BTL7 Compact. The distance measuring system, which is 100% backward-compatible with the existing BTL5 generation, impresses with its improvement in many types of performance data and a large number of extensions to the application and function.

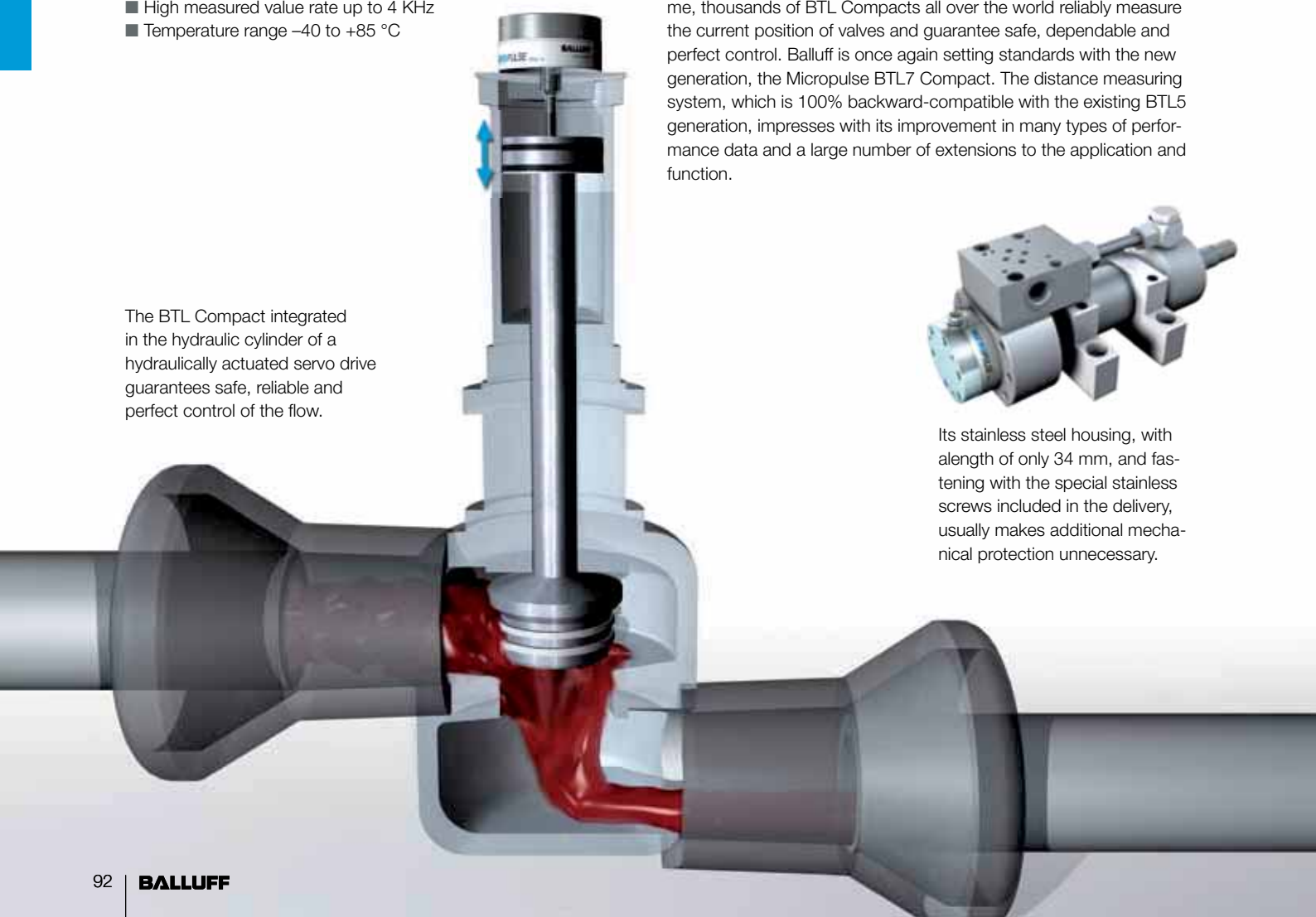

The BTL Compact integrated in the hydraulic cylinder of a hydraulically actuated servo drive guarantees safe, reliable and perfect control of the flow.

Its stainless steel housing, with alength of only 34 mm, and fastening with the special stainless screws included in the delivery, usually makes additional mechanical protection unnecessary.

Micropulse Transducers BTL7 Compact

Compact in stainless steel for
precise measurement of the piston position

Micropulse transducer BTL7 Compact Rod with Calibration Box BTL-A-CB02

Set the output characteristic with the calibration box. Zero and end point, measuring range, rising and falling characteristic.

BTL7 Compact offers added value

The calibration box BTL-A-CB02 allows adjusting the characteristic of the distance measuring system easily and quickly to the requirements of the hydraulic cylinder and application. Without PC, laptop and extensive software download, just a simple plug & play and the measuring range as well as the slope of the output characteristic is set. The setting option saves storage and construction costs since a Micropulse BTL7 Compact can meet different requirements where several systems were necessary in the past.

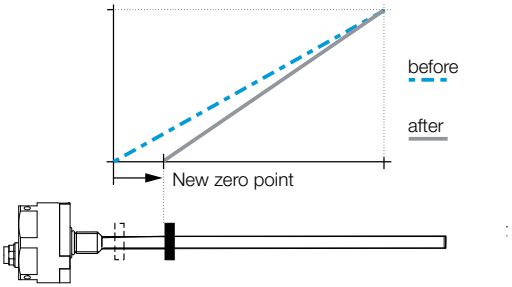

Import new zero point

Part number	Analog output signal
BTL7-A5..-M...-K, H, W-...	0...10 V and 10...0 V
BTL7-G5..-M...-K, H, W-...	–10...+10 V and +10...–10 V
BTL7-E5..-M...-K, H, W-...	4...20 mA and 20...4 mA
BTL7-C5..-M...-K, H, W-...	0...20 mA or 20...0 mA

Teach-in

The factory-set zero and end point is replaced by a new zero and end point. The zero and end points can be set independently of each other, and the output gradient changes.

Inverting (only with BTL7-C/E)

The characteristic of the current output can be inverted by activating the programming inputs. For example, the rising characteristic of the output becomes a falling characteristic. The voltage outputs are not inverted.

Design K, BTL7-...-SR32, plug connection S32, radial

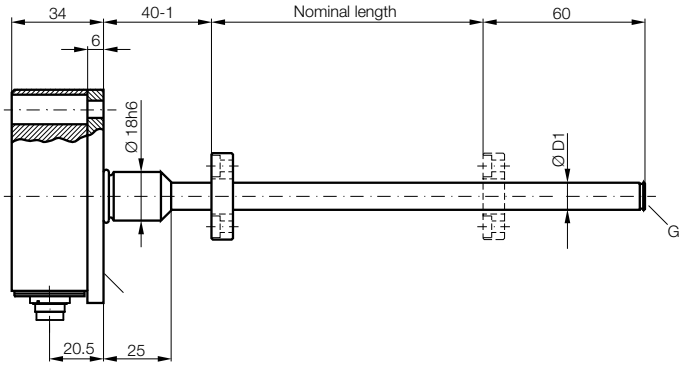

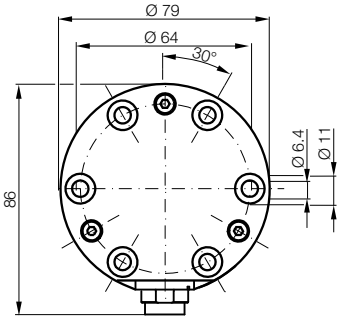

more added value

Clever – the new integrated connector system ZA0 from Balluff
Ideal for hydraulic cylinders with rod eyes, where the Micropulse BTL AR is totally integrated in the cylinder and the hollow-bored piston rod. With the Standard 4-pin M12 connector, the screen connection is via a flange and union nut. An 8-pin M12 version will be available shortly.

Features
- Simple and fast installation that reduces costs
- Small design and integrative to save installation space
- Standard solution for Standard M12 connector
- Degree of protection IP 67
- Prefabricated complete solutions available

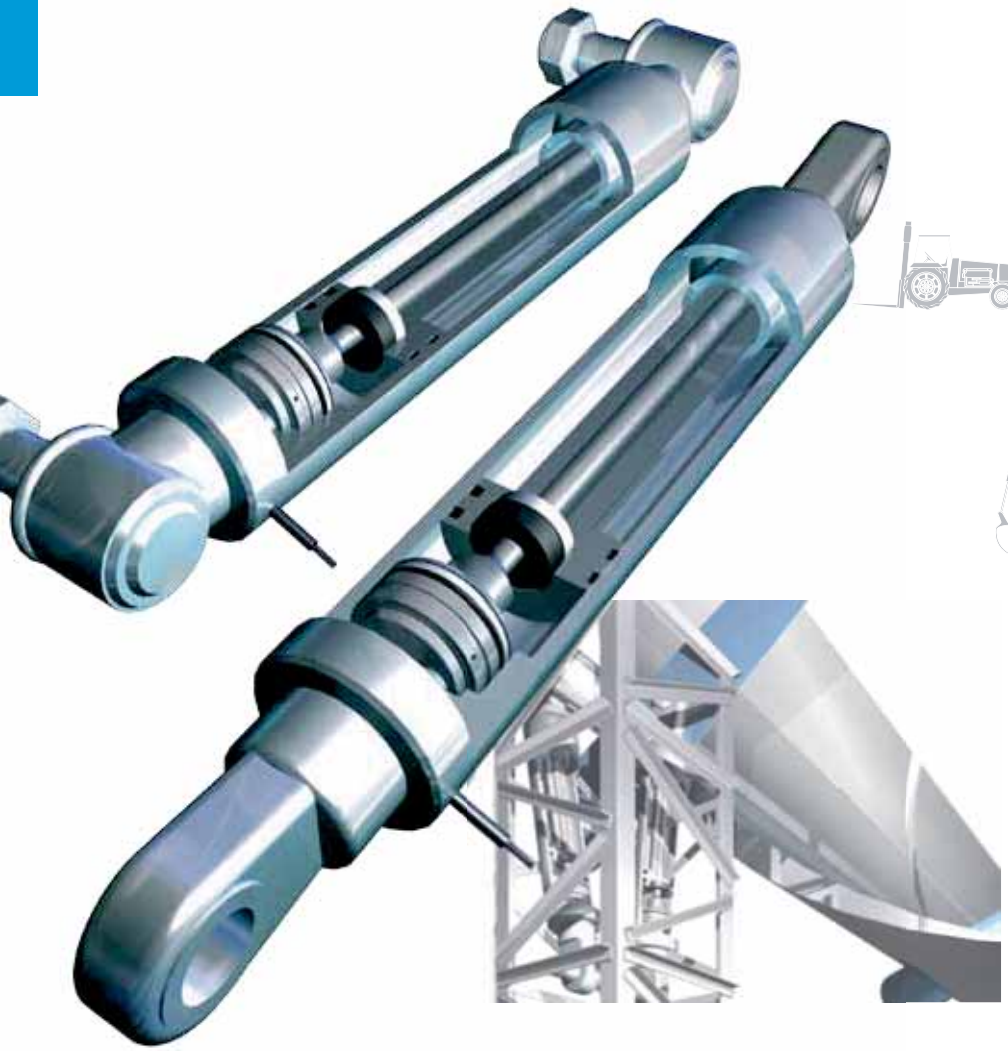

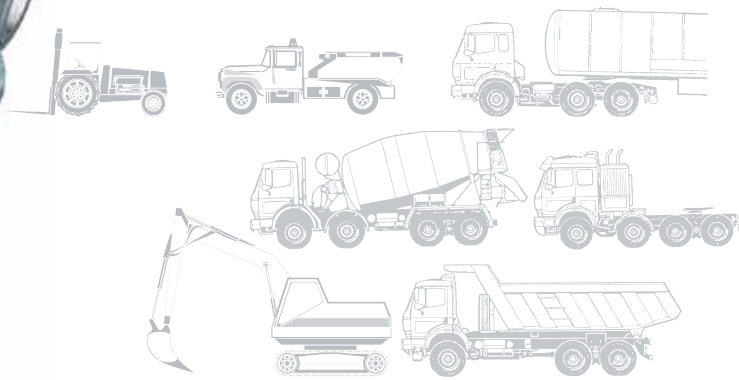

Thermosolarkraftwerke

Micropulse Transducers BTL AR ZA0

ZA0-M12 integrated connector system, fast and simple installation

A simple "click" and the IP 67 plug-in connector is ready
Push the distance measurement system Micropulse AR into the hydraulic cylinder. Insert the connector insert into the connector flange (1), let it click (2), secure the connector flange (3) and the IP 67 connector (4) is ready.

Model	
BTL6-A/B/E-...-M...-E-**KA-ZA0**	Connector system for transducers with cable outlet
BTL6-A/B/E-...-M...-E-**LA-ZA0**	Connector system for transducers with strand outlet

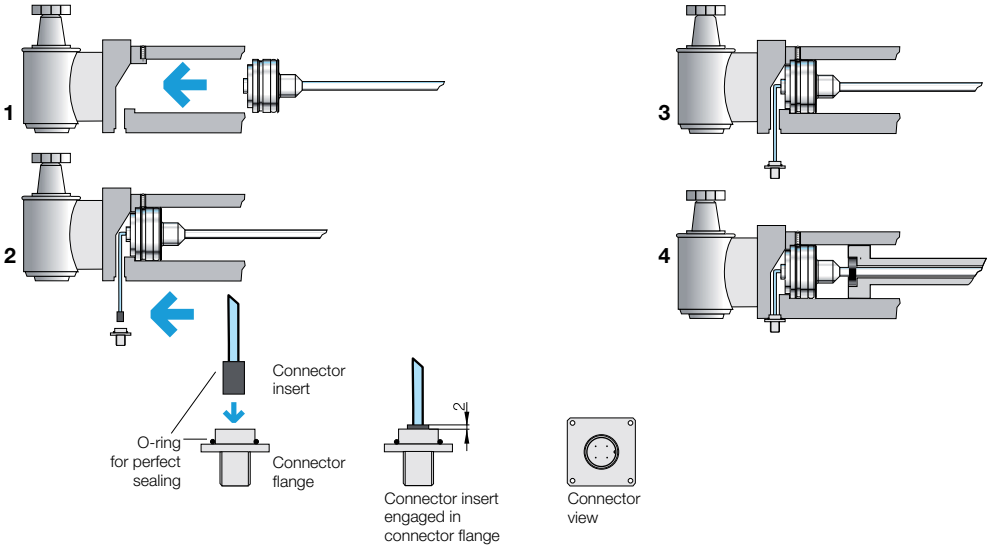

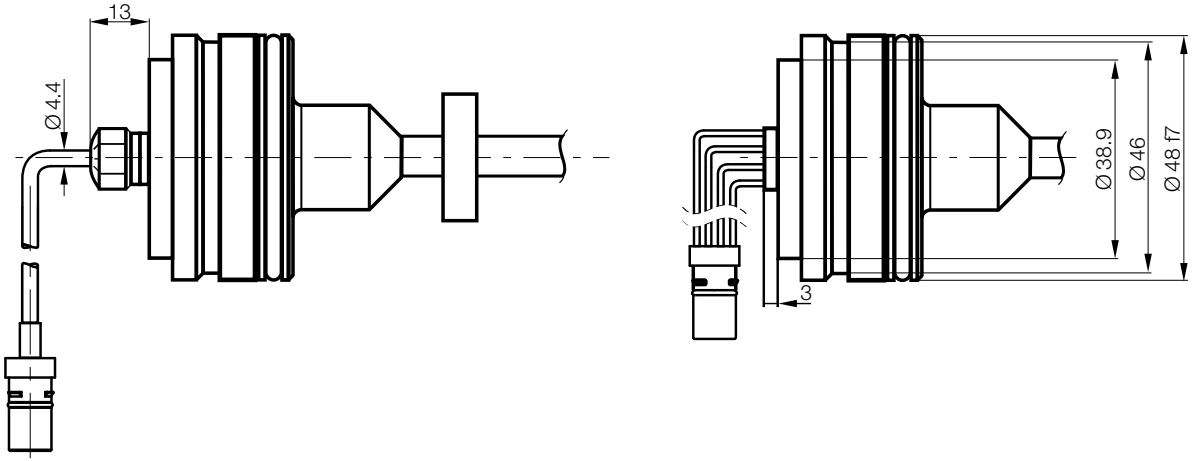

Fluid Sensors

Pressure Sensors
Capacitive Sensors for Level Detection
Fork Sensors for Fluid Detection
Micropulse Filling Level Sensor

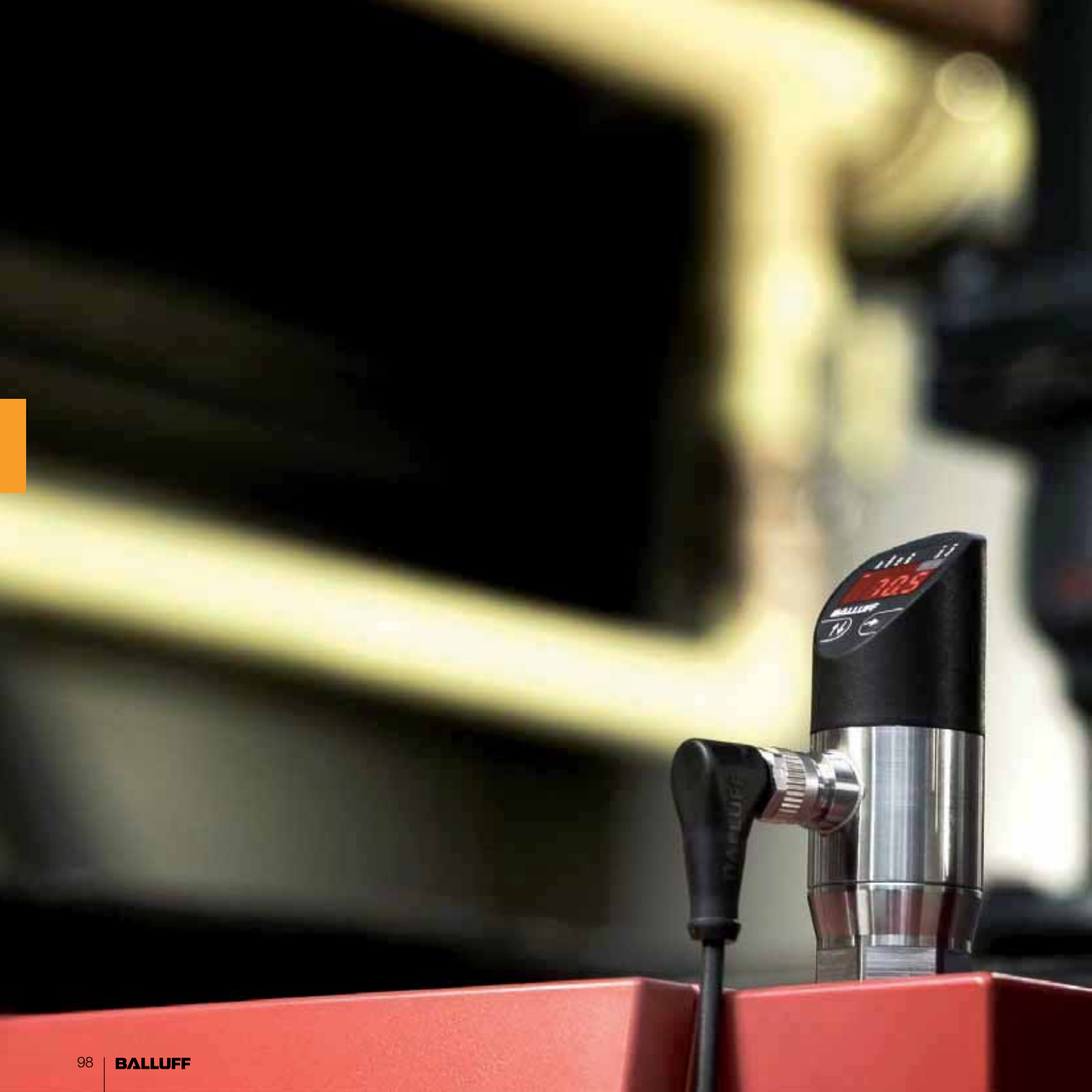
BALLUFF

Standard Pressure Sensors BSP

For a wide variety of applications in factory automation

Standard Balluff pressure sensors offer an impressive price/performance ratio and are suitable for a wide variety of applications in factory automation. A large display and simple operating concept according to VDMA save time when configuring parameters. These Balluff pressure sensors are versatile and space-saving. The display and electrical output can be rotated independently of the flange. Other features of these sensors include:

- A compact housing design
- Local pressure display
- Digital switching outputs
- Analog output signals

more added value

11 Pressure variants
33 PNP variants
33 NPN variants
22 Output variants
2 programmable switching points
22 Output variants
1 programmable switching point and analog output 0...10 V DC
22 Output variants
1 programmable switching point and analog output 4...20 mA

= 66 variants standard pressure sensors

Refer to our BSP pressure sensor catalog or visit **www.balluff.com** for further information

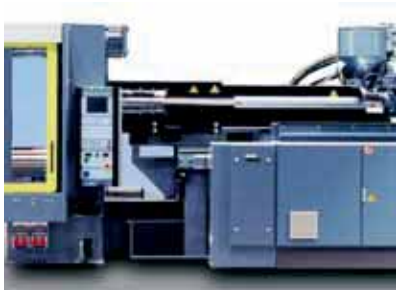

Pressure ranges		**–1...2 bar, –1...10 bar, 0...2 bar, 0...5 bar, 0...10 bar, 0...20 bar, 0...50 bar, 0...100 bar, 0...250 bar, 0...400 bar, 0...600 bar**
Operating voltage U_B		18...36 V DC
Switching frequency f max.		200 Hz
Accuracy		≤ ±0.5 % FSO BFSL
Temperature error		≤ ±0.3 % FSO/10 K
Ambient/material temperature		**–25…+85 °C/–25...+125 °C**
Degree of protection per IEC 60529		IP 67 (when connected)
Material	Housing	PA 6.6, stainless steel
	Measuring cell	Ceramic
	Seal	Fluoroelastomer
Connection	Connector	M12 connector, 4-pin
	Process connection	G 1/4"

more added value

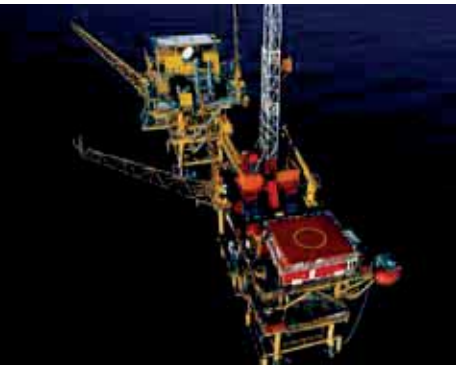

11 Pressure variants
33 PNP variants
33 NPN variants
22 Output variants
2 programmable switching points
22 Output variants
1 programmable switching point and analog output 0...10 V DC
22 Output variants
1 programmable switching point and analog output 4...20 mA

= 66 variants high-end pressure sensors

Balluff pressure sensors for high-end applications were designed for demanding requirements and extended temperature ranges. The high-end pressure sensor is ideal for harsh environments. The compact housing is manufactured entirely from hard-wearing stainless steel. Parameters are configured quickly and easily in line with VDMA standards. High-end applications include:

- Wind turbines
- Off-shore
- Refrigeration and air-conditioning systems

Pressure ranges		**–1...2 bar, –1...10 bar, 0...2 bar, 0...5 bar, 0...10 bar, 0...20 bar, 0...50 bar, 0...100 bar, 0...250 bar, 0...400 bar, 0...600 bar**
Operating voltage U_B		18...36 V DC
Switching frequency f max.		200 Hz
Accuracy		≤ ±0.5 % FSO BFSL
Temperature error		≤ ±0.3 % FSO/10 K
Ambient/material temperature		**–40…+85 °C/–40...+125 °C**
Degree of protection per IEC 60529		IP 67 (when connected)
Material	Housing	PA 6.6, stainless steel
	Measuring cell	Ceramic
	Seal	Fluoroelastomer
Connection	Connector	M12 connector, 4-pin
	Process connection	G 1/4"

Refer to our BSP pressure sensor catalog or visit **www.balluff.com** for further information

High-End Pressure Sensors BSP

For demanding applications involving extended temperature ranges

New

The new capacitive SmartLevel sensors in the Uniflat design detect conductive media through non-metallic container walls with a thickness up to 10 mm extremely reliably. With a well-conceived fastening design, they can be screwed on or secured with cable ties to bypass pipes.

The connection is made using a 2 m connection line or a short pigtail line and an M8 plug. The codable output function provides PNP or NPN and normally open or normally closed functionality.

- No adjustment with standard applications
- Simple cable tie assembly on pipes
- Hides foam and residual material
- Regular cleaning can be omitted

more added value

SMARTLEVEL

BCS Capacitive Sensors

The new 40×40 mm sensor – also available as SmartLevel

Size		**40×40×10 mm** Uniflat	**40×40×10 mm** Uniflat
Installation type		flush	flush
Rated switching distance s_n		**media-dependent**	**media-dependent**
PNP/NPN and normally open/ normally closed cod able	**Ordering code**	**BCS00TP**	
	Part number	BCS Q40BBAA-GPCFAC-EP02	
PNP normally open	**Ordering code**		**BCS00U8**
	Part number		BCS Q40BBAA-PSCFAC-EP00,3-GS49
PNP normally closed	**Ordering code**		**BCS00U7**
	Part number		BCS Q40BBAA-POCFAC-EP00,3-GS49
Supply voltage U_B		10...30 V DC	10...30 V DC
Voltage drop U_d at I_e		2.5 V	2.5 V
Rated insulation voltage U_i		75 V DC	75 V DC
Output current max.		100 mA	100 mA
No-load supply current I_0 max.		11 mA	11 mA
Polarity reversal/short-circuit protected		yes/yes	yes/yes
Ambient temperature T_a		–5 to +85 °C	–5 to +85 °C
Switching frequency f		10 Hz	10 Hz
Output function/power-on indicator		yes/yes	yes/yes
Degree of protection as per IEC 60529		IP 67	IP 67
Material	Housing	PBT	PBT
	Sensing surface	PBT	PBT
	Cover	PBT	PBT
Connection		2 m PUR cable, 3×0.14 mm²	0.3 m PUR cable with M8 plug, 3-pin

Wiring diagram

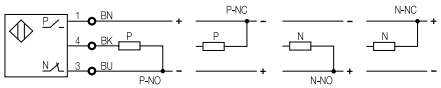

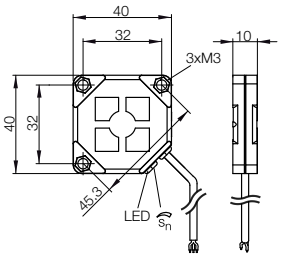

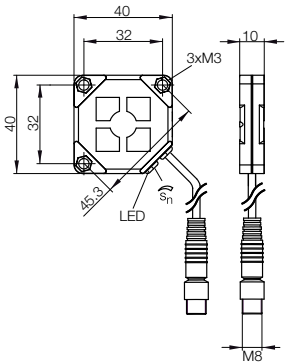

more added value

- Detecting high-conductive acids, such as sulfuric or hydrochloric acid, through plastic or glass containers that are up to 20 mm thick
- Reliable detection of fill levels in food items, such as ketchup or mustard, despite heavy buildup
- Detecting concentrated cleaning agents in plastic containers

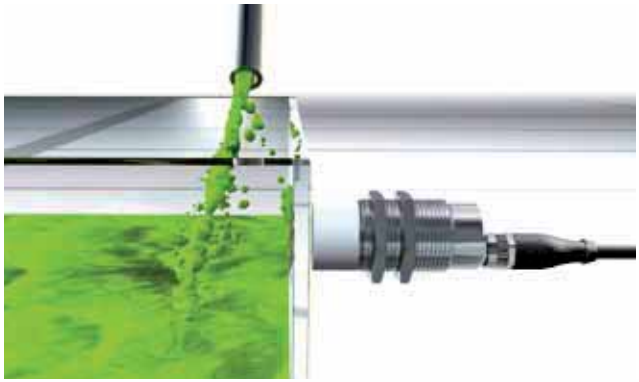

Industrial wastewater (depending on conductivity of the medium)		
Disinfectants (media containing chlorine)		
Table salt solution		
Rinsing agents		
Milk/buttermilk/yogurt		
Fruit juice		
Coolant/lubricants		Ketchup/mustard
Formic acid (30 %)		Phosphoric acid (10 %)
Vinegar		Sulfuric acid (10 %)
Cola		Calcium chloride (30 %)
Honey/glue	Blood	Hydrochloric acid (40 %)
Beer	Seawater	Nitric acid (12 %)
SMART*LEVEL* 15 approx. 0.7...15 mS	**SMART***LEVEL* 50 approx. 15...50 mS	**SMART***LEVEL* 500+ approx. 50...500 mS and greater

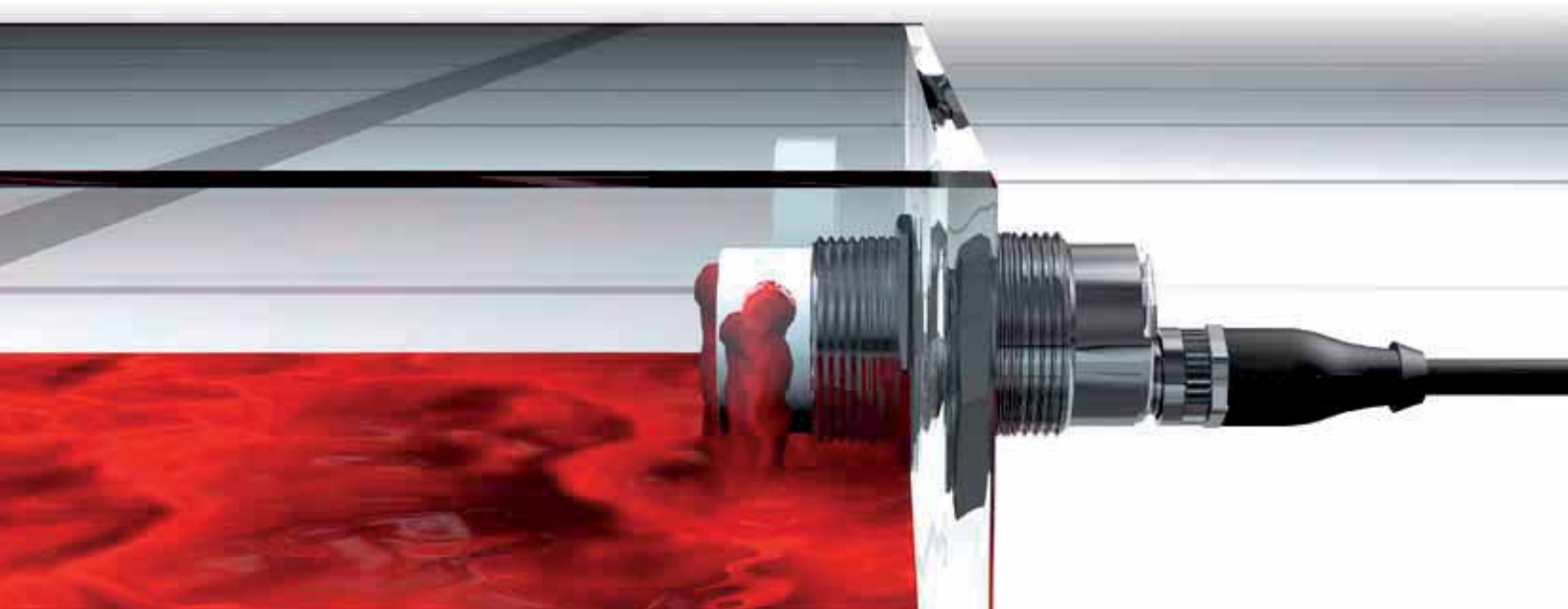

Capacitive Sensors SMART*LEVEL* 500+

Progress in smart level technology

SMART*LEVEL* 500+

SMART*LEVEL* 500+

Size		**M30×1.5**	**M30×1.5**
Installation type		Non-flush	Non-flush
Rated switching distance s_n		**media-dependent**	**media-dependent**
PNP/NPN and normally open/ normally closed user codable	**Ordering code**	**BCS00HJ**	**BCS00TZ**
	Part number	BXS M30T4M3-GPCFVG-S04G	BCS M30TTH2-GPCFVG-AT02
Supply voltage U_B		10...30 V DC	10...30 V DC
Voltage drop U_d at I_e		≤ 2 V	≤ 2 V
Rated insulation voltage U_i		75 V DC	75 V DC
Output current max.		100 mA	100 mA
No-load supply current I_0 max.		< 15 mA	< 15 mA
Polarity reversal/short-circuit protected		yes/yes	yes/yes
Ambient temperature T_a		–10 to +60 °C	–10 to +60 °C
Switching frequency f		5 Hz	5 Hz
Supply voltage/output function indicator		Green LED/yellow LED	no/red LED
Degree of protection as per IEC 60529		IP 64, connection side IP 67	IP 67
Material	Housing	V2A	PTFE (Teflon)
	Sensing surface	PTFE (Teflon)	PTFE (Teflon)
	Cover	PBT/PE	PTFE (Teflon)
Connection		M12 connector, 4-pin, A-coded	2 m PTFE cable, 3×0.2 mm²

Wiring diagram

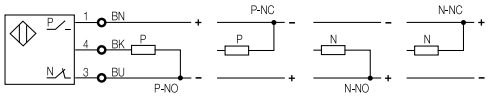

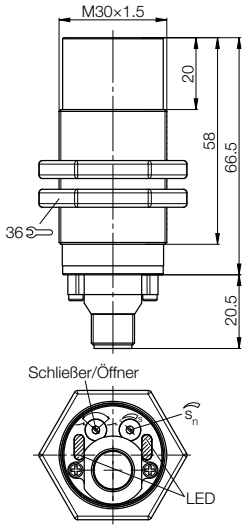

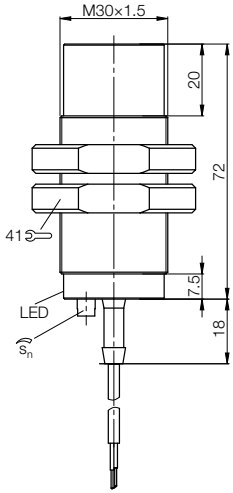

more added value

- Detect fluids with a water content > 15 %
- Detection independent of color
- Thin deposits can be masked

Balluff has widened its scope of expertise in through-beam fork sensors by offering sensors for fluid detection. The through-beams with fork openings of 30 mm and 80 mm are suitable for detecting the level of clear, colored or turbid fluids with a water content > 15 % through transparent container walls. Balluff offers a solution for applications where other sensors reach their limits. For example, with this through-beam fork sensor, you can identify hydrous liquids even in small, transparent hoses.

Fork Sensors for Fluid Detection

Reliable level detection through transparent container walls

Ordering code / Part number		BGL003J / BGL 30A-011-S49	BGL003K / BGL 30A-012-S49	BGL003L / BGL 80A-011-S49	BGL003M / BGL 80A-012-S49
Switching output	PNP	■		■	
	NPN		■		■
Switching type	NC/NO selectable	■	■	■	■
Connection	M8 connector, 3-pin	■	■	■	■
Fork opening	30 mm	■	■		
	80 mm			■	■
Light type		Infrared			
Switching frequency		2 kHz			
Degree of protection		IP 67			
Housing material		Gd-Zn			
Optical surface		Glass			

For additional information visit our website at **www.balluff.com**

more added value

- Continuously precise measurement in µ range delivers excellent filling results.
- 100 % stainless steel ensures top hygiene standards and long service life.
- International certificate guarantees maximum quality.

Maximum precision for food hygiene – internationally certified

The BTL-SF filling level sensor ensures continuously precise measurement in applications that demand extreme hygiene. Made from corrosion-free stainless steel with excellent surface quality and rounded edges, the sensor meets the highest international hygiene standards and fulfills all strict requirements of the food industry. Take advantage of the best quality directly from the manufacturer.

Other benefits

- Neutral for all liquids
- Compensates for foam to deliver reliable filling level values
- Adjustment-free installation
- Easy to clean in installed state (CIP – Clean in Place)
- For process temperatures up to 130 °C (SIP – Sterilization in Place)
- Standardized interfaces ensure flexible installation
- Internationally certified quality guarantees global marketing and sales of your system
- Rising and falling signal available

Micropulse BTL-SF Filling Level Sensor

Maximum precision for foodstuffs and hygiene

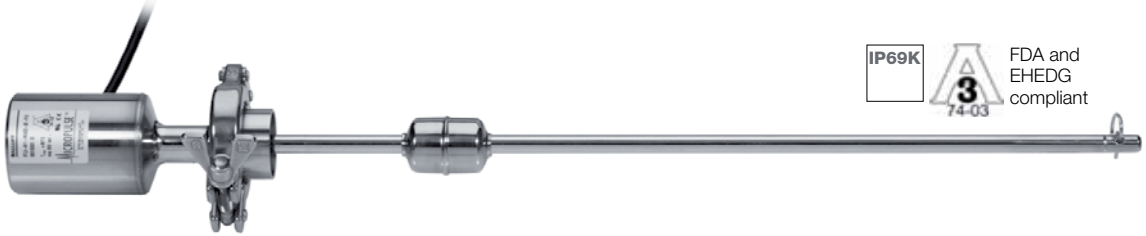

IP69K

FDA and EHEDG compliant

Model	BTL5 rod SF
Interface transducer	analog
Interface - customer device	analog
Ordering code	**BTL5-...-M_ _ _ _-SF-F_ _**
Reverse polarity protected	Yes
Overvoltage protected	36 V
Dielectric constant	500 V (GND to housing)
Degree of protection per IEC 60529	IP 67/IP 69K (flange and tube)
Housing material	Stainless steel 1.4404
Flange and tube material	1.4404
Connection	Cable connection
Mounting	1.5" Tri Clamp as per SSI 3A standard 74-03
Pressure rating	300 bar (depending on float)
Standard nominal length (mm)	0025, 0050, 0075, 0100, 0125, 0150, 0175, 0200, 0225, 0250, 0275, 0300, 0325, 0350, 0375, 0400, 0425, 0450, 0475, 0500, 0550, 0600, 0650, 0700, 0750, 0800, 0850, 0900, 0950, 1000, 1100, 1200, 1300, 1400, 1500, 1600, 1700, 1800, 1900, 2000, 2250, 2500 or in 5 mm increments on request

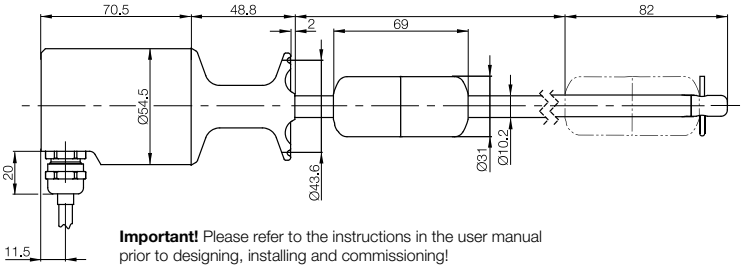

Important! Please refer to the instructions in the user manual prior to designing, installing and commissioning!

Refer to our Micropulse transducer brochures and catalogs or visit **www.balluff.com** for more detailed information

Industrial Identification

Vision Sensors
Industrial RFID Systems

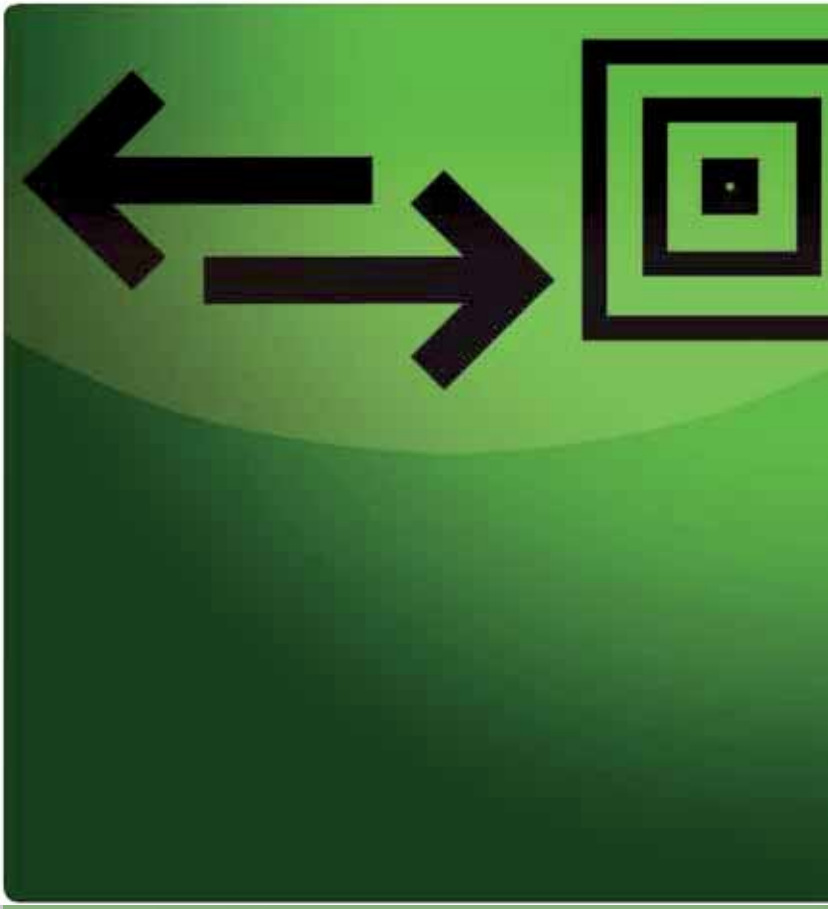

more added value

Check the marking on your products. Regardless of whether you label them with 1D codes (bar codes) or 2D codes (data Matrix codes), the BVS reads all common codes on the market. Text and sequences of numbers such as code plain text can be verified using OCV. The result: "*Inspection OK*" or "*Inspection not OK*".
If you need to view the read code data to find out which parts are being processed, you can output it via the RS232 or Ethernet interface.

- Simple operation
- Read several codes in an inspection simultaneously
- Output code data via RS232 or Ethernet interface
- Verify character strings
- Codes readable in any position
- Extensive range of accessories
- Function module for PLC available as of November

Readable bar codes
- Interleaved 2-of-5
- Code 39
- Code 128
- Pharmacode
- Codabar
- EAN 8
- EAN 13
- UPC-E
- PDF 417

Readable Data Matrix codes
- ECC 200

ePLAN

EPLAN macros – Electrical project planning made easy. Also for the BVS!

Vision Sensors BVS-E Identification

Detecting and identifying varied codes

Series		BVS-E Identification	BVS-E Identification	BVS-E Identification
Lens, focal length		Standard lens, 8 mm	Telephoto lens, 12 mm	Telephoto lens, 16 mm
PNP	**Ordering code**	**BVS0001**	**BVS000T**	**BVS000Y**
	Part number	BVS ID-3-001-E	BVS ID-3-003-E	BVS ID-3-007-E
Operating voltage U_B		24 V DC ±10 %	24 V DC ±10 %	24 V DC ±10 %
Switching inputs		1× Trigger, 1× Select	1× Trigger, 1× Select	1× Trigger, 1× Select
Switching outputs		1× lighting synchron., 1× PNP	1× lighting synchron., 1× PNP	1× lighting synchron., 1× PNP
Interface		RS232	RS232	RS232
Configuration interface		Ethernet 10/100 Base T	Ethernet 10/100 Base T	Ethernet 10/100 Base T
Typ. detection rate		3...15 Hz (depending on evaluation function)	3...15 Hz (depending on evaluation function)	3...15 Hz (depending on evaluation function)
Working range		50...1000 mm	50...1000 mm	150...1000 mm
Working distance, Field of view (horizontal×vertical)		50 mm, 25×18 mm / 1000 mm, 500×360 mm	50 mm, 16×12 mm / 1000 mm, 312×237 mm	150 mm, 34×26 mm / 1000 mm, 229×172 mm
Illumination		LED, incident light (red), deselectable	LED, incident light (red), deselectable	LED, incident light (red), deselectable
Eye safety per IEC 62471		Free group	Free group	Free group
Connection		2 connectors M12 (8- and 4-pin)	2 connectors M12 (8- and 4-pin)	2 connectors M12 (8- and 4-pin)
Degree of protection per IEC 60529		IP 54	IP 54	IP 54

To define the field of view and working distance, use the distance calculator at: **www.balluff.com/vision**

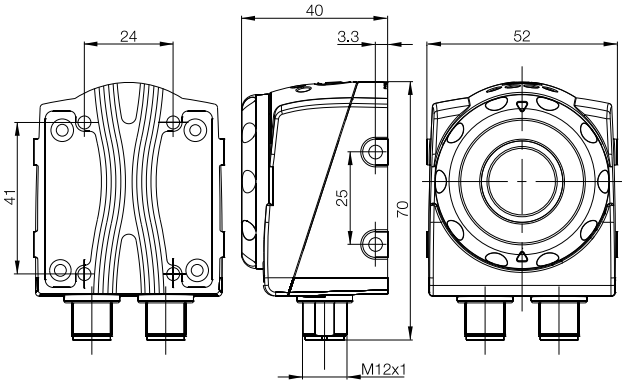

Balluff Added-Value Kits (BAV) contain a Vision Sensor, mounting bracket, installation accessories, connector, software CD and operating instructions. **For more information, see page 118.**

more added value

- Simple, self-explanatory operation
- Can be retrofitted on all existing sensors
- Clearly arranged presentation of process statistics and sensor results
- Access for operators, setters and administrators can be controlled by passwords
- Memory for 20 inspections
- Connection to sensor via direct link or network (TCP/IP)

Do you want to see what the sensor sees? You wish to increase your inspection quality with the use of statistical values? And to simply adapt your inspection to changes in components? We have a simple solution: the Vision Sensor Monitor.
It visualizes the sensor images and inspection results and displays the process statistics in a simple overview graphic. The detection of unwanted deviations thus becomes really simple. If an inspection feature changes, such as a sell-by date, authorized users can then adapt the inspection criteria even without a PC. Lengthy setting work is therefore no longer necessary. The monitor allows simple switching between two inspections. The easy-to-use, intuitive user interface of the monitor can be controlled by operating buttons and is available in multiple languages.

Vision Sensor Monitor BVS-E

See what the sensor sees

Model		Vision Sensor Monitor
Type		BVS-E
PNP	**Ordering code**	**BAE00EH**
	Part number	BAE PD-VS-002-E
Operating voltage U_B		24 V DC ±10 %
Dimensions		96×96×42.4 mm
Connection		2× M12 connector, 4-pin
Degree of protection per IEC 60529		IP 40
Ambient temperature T_a		–10...+55 mm
Display		3.5“ color LCD

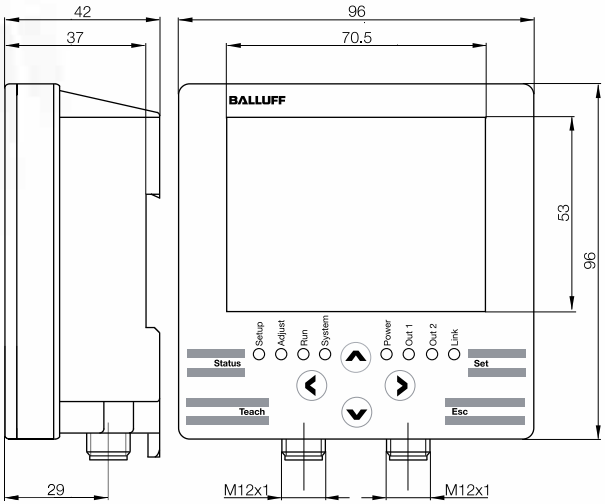

Available accessories:

- 2 m connecting cable
  BCC M415-0000-1A-004-PX0334-020 **Ordering code: BCC030A**
- 5 m connecting cable
  BCC M415-0000-1A-004-PX0334-050 **Ordering code: BCC030C**
- 2 m connecting cable, monitor/sensor
  BCC M415-M415-5D-687-ES64N8-020 **Ordering code: BCC0ANA**
- 5 m connecting cable, monitor/sensor
  BCC M415-M415-5D-687-ES64N8-050 **Ordering code: BCC0ANC**
- 5 m Ethernet cable, monitor/RJ45
  BKS-AD-05-RJ45/GS180-05 **Ordering code: BCC02H1**
- 10 m Ethernet cable, monitor/RJ45
  BKS-AD-05-RJ45/GS180-10 **Ordering code: BCC02H2**
- Monitor protective housing
  BAM PC-AE-002-1 **Ordering code: BAM01A8**

BALLUFF
VISION SENSOR IP67+
BALLUFF
VISION SENSOR IP67+

Degree of Protection IP 67+, Inexpensive Retrofit

Optional housing for Vision Sensors BVS

- Rugged housing
- Degree of protection IP 67+
- Flexible handling
- Simply assembly and mounting
- Full range of sensor functions
- Inexpensive acquisition

more added value

Balluff now provides an optional housing for splash water areas and other problematic environments for all sensors in the Vision Sensor family. With its IP 67+ protection, it also provides safe protection during long-term use in harsh environments. With a few simple hand movements, the sensor is easily integrated in the robust housing and then mounted on a machine or system. All functions are then available as usual without any loss.

Description	Protective housing BAM for Vision Sensors BVS
Ordering code	**BAM01RR**
Part number	BAM PC-VS-008-1
Dimensions	175×80×62 mm
Mounting	M4 screws (163×52 mm)
Connection	Screwed cable gland M25×1.5 (1× Ø 5 mm, 1× Ø 6 mm)
Degree of protection per IEC 60529	IP 67
Housing material	Cast aluminum, lacquered
Optical surface	Anti-reflective glass

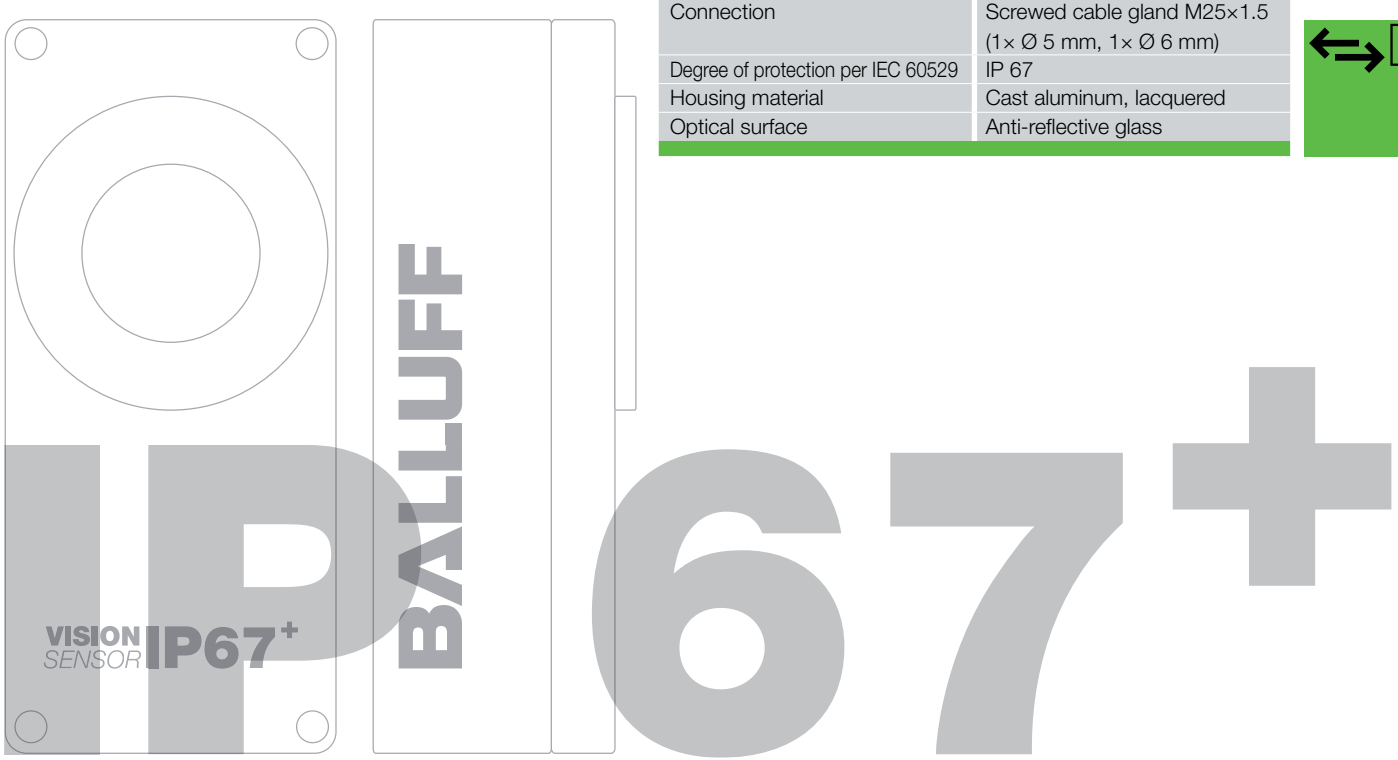

more added value

Ever experienced this? You ordered the Vision Sensor BVS with connecting cable. During initial operation, however, you determine that the parameterization cables and mounting brackets are still missing.
This is why we have integrated the Vision Sensor BVS with accessories for you in a package. You only have to order one item and you have everything you need to operate the sensor.
An Added-Value Kit contains a Vision Sensor in a design of your choice, including software CD and operating instructions, mounting bracket and installation accessories, supply and parameterization cables, which means you only have to connect a 24-V power supply unit. If you do not happen to have a power supply unit, needless to say we can also supply you with one.

Balluff Added-Value Kits for Vision Sensors BVS

Sensors and accessories – neatly packed

BAVKIT

	Description		Added-Value Kit with Vision Sensor BVS
STD	**Standard** series with **6-mm** lens	**Ordering code**	**SET00WC**
	(contains the sensor BVS OI-3-005-E)	Part number	BAV BP-PP-00022-01
	Standard series with **8-mm** lens	**Ordering code**	**SET00W9**
	(contains the sensor BVS OI-3-001-E)	Part number	BAV BP-PP-00020-01
	Standard series with **12-mm** lens	**Ordering code**	**SET00WA**
	(contains the sensor BVS OI-3-003-E)	Part number	BAV BP-PP-00021-01
ADV	**Advanced** series with **6-mm** lens	**Ordering code**	**SET00WH**
	(contains the sensor BVS OI-3-055-E)	Part number	BAV BP-PP-00025-01
	Advanced series with **8-mm** lens	**Ordering code**	**SET00WE**
	(contains the sensor BVS OI-3-051-E)	Part number	BAV BP-PP-00023-01
	Advanced series with **12-mm** lens	**Ordering code**	**SET00WF**
	(contains the sensor BVS OI-3-053-E)	Part number	BAV BP-PP-00024-01
	Advanced series with **16-mm** lens	**Ordering code**	**SET00WJ**
	(contains the sensor BVS OI-3-057-E)	Part number	BAV BP-PP-00026-01
ID	**Identification** series with **8-mm** lens	**Ordering code**	**SET00W6**
	(contains the sensor BVS ID-3-001-E)	Part number	BAV BP-PP-00017-01
	Identification series with **12-mm** lens	**Ordering code**	**SET00W7**
	(contains the sensor BVS ID-3-003-E)	Part number	BAV BP-PP-00018-01
	Identification series with **16-mm** lens	**Ordering code**	**SET00W8**
	(contains the sensor BVS ID-3-007-E)	Part number	BAV BP-PP-00019-01
	Contents		Vision sensor, mounting bracket, installation accessories, connector, software CD and operating instructions

CE

Series	
Ordering code	
Part number	
Supply voltage U_B	
Operating current	
Light field size	
Emitter, light type	
Wavelength	
Dimension	
Connection	
Housing material	
Weight	
Degree of protection as per IEC 60529	
Polarity reversal protected	
Short-circuit protected	
Ambient temperature T_a	
Storage temperature	

Spotlights with IP 67 Protection

Can be used universally – red light and infrared

more added value

- IP 67 form of protection
- Versatile in application and can be used universally
- Energy-saving LED technology
- Red light and infrared variants available
- Space-saving M18 and M30 designs
- Precision illumination, even from a great distance

The requirements are particularly demanding if the operational environment is particularly harsh. Spotlights in the housing with the IP 67 form of protection, which Balluff is the first to offer, are the right lights for the job. The extremely robust versions in the space-saving sizes M18 and M30 are also characterized not only by their low power consumption but also by their powerful and evenly distributed light spot in red light and infrared variants.

	M18 spotlight, Red light	M30 spotlight, Red light	M18 spotlight, Infrared	M30 spotlight, Infrared
	BAE00H0	**BAE00FT**	**BAE00H1**	**BAE00H2**
	BAE LX-VS-SR018	BAE LX-VS-SR030	BAE LX-VS-SI018	BAE LX-VS-SI030
	24 V DC	24 V DC	24 V DC	24 V DC
	85 mA	120 mA	85 mA	115 mA
	Ø 18 mm	Ø 30 mm	Ø 18 mm	Ø 30 mm
	LED, red	LED, red	LED, infrared	LED, infrared
	617 nm	617 nm	850 nm	850 nm
	M18×72 mm	M30×62 mm	M18×72 mm	M30×62 mm
	M12 connector, 4-pin	M12 connector, 4-pin	M12 connector, 4-pin	M12 connector, 4-pin
	Nickel-plated brass	Nickel-plated brass	Nickel-plated brass	Nickel-plated brass
	75 g	90 g	75 g	90 g
	IP 67	IP 67	IP 67	IP 67
	yes	yes	yes	yes
	yes	yes	yes	yes
	0...+50 °C	0...+50 °C	0...+50 °C	0...+50 °C
	–10...+60 °C	–10...+60 °C	–10...+60 °C	–10...+60 °C

Spotlight: A spotlight is perfect for the precision illumination of specific areas. Greater inspection distances can be implemented if a spotlight is used. Unlike ring lights, spotlights can be attached in any position and the light swiveled towards the area that you wish to illuminate.

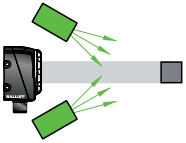

more added value

- No interference by extraneous light
- Sharp image of object contours
- Easy registration of dimensions
- Object surface with no influence on inspection result

Extremely Flat Infrared Background Lights

Including trigger and function display

Background lights are suitable for the through-beam method or for diffuse object illumination. Infrared light is invisible to the human eye – machine operators are no longer dazzled by these lights and your image processing solution still works perfectly. Balluff has extended its background light range by an infrared version. They have high-quality, highly luminous LEDs, which guarantee an intensive and evenly distributed illumination field. The required operational safety is guaranteed by an LED status display and a trigger.

Special properties:

- Powerful LEDs
- Status display on/off
- 24 V DC operating voltage, trigger
- Extremely flat design, low space requirements
- Easy assembly

Light field 100×100 mm

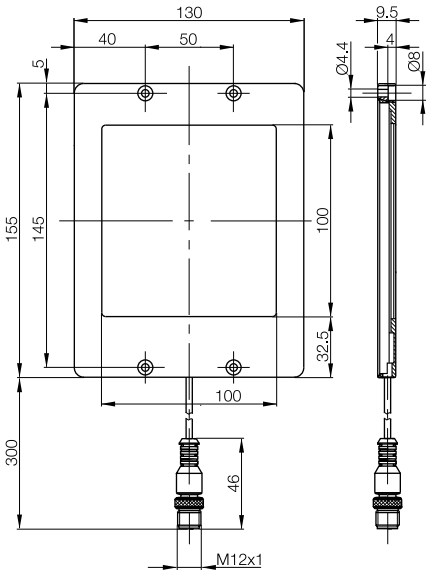

Series	BAE LX-VS
Type	Background light, infrared
Ordering code	**BAE00FR**
Part number	BAE LX-VS-HI100
Operating voltage U_B	18...30 V DC
Operating current	500 mA
Light field size	100×100 mm
Emitter, light type	LED, infrared
Wavelength	875 Nm
Dimension	155×130×9.5 mm
Mounting	M4 screws
Connection	M12 connector, 4-pin
Housing material	Al anodized
Optical surface	Glass
Weight	345 g
Degree of protection per IEC 60529	IP 54
Polarity reversal protected	Yes
Short-circuit protected	Yes
Ambient temperature T_a	–10...+55 °C
Storage temperature range	–25...+75 °C

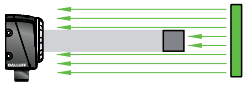

Background lighting: With the through beam method, the background lighting is positioned behind the object you wish to detect. The Vision Sensor only detects the outline of the object based on this position and allows you to monitor part dimensions or shapes extremely easily. Extraneous light also poses no problems. Changes in the surface (markings, color, etc.) can be suppressed almost completely and have no influence on the test result. Our background lights are particularly bright and versatile. They are also very suitable as diffuse incident lights to illuminate highly reflective components. Due to the extremely flat design, they are ideal for use in applications with limited space.

more added value

Modern production technologies with smaller batch sizes and ever shorter production cycle times require unambiguous recognition and matching of the produced parts. In response, various systems for industrial identification such as bar codes have been developed. These are inexpensive, but wear quickly. In addition, they are inherently read-only and hold a limited amount of data.

Far greater flexibility is provided by industrial RFID, inductive identification systems with read and write capability for ensuring the most current data in every single process segment. Balluff Industrial RFID BIS reliably process large quantities of data without making visual contact.

Unlimited read/write cycles ensure flexible, rapid, contact-free communication even for the transfer of large data quantities in highly dynamic applications. Our wear-free BIS are easy to integrate in all types of controllers.

Economical Balluff identification systems are able to manage the large volumes of information required in modern-day production plants and make sure your data is transferred to the right place at the right time. All the relevant production and quality data can be acquired and recalled at any time: for optimized production processes and maximum production reliability. Profit from the advantages of Balluff Industrial RFID and benefit from more than 25 years of Balluff RFID expertise. Simply select from the product range according to your application requirements.

Benefits

- **Quick, flexible non-contact data communication without visual contact**
- **Industrial strength in any environment**
- **High-performance, cost-effective**

Why RFID from Balluff?

Comprehensive system expertise – many years of experience

More than 25 years of experience with Industrial RFID –
make use of our knowledge and expertise.

Extensive product portfolio: LF-HF-UHF
the right solution for every application.

No experiments –
benefit from our application experience.

Project support from A...Z –
your solution from a single source.

Service whenever you need it –
you can rely on us.

Global presence – short channels –
ensure rapid availability on a global scale.

Functional and operational reliability –
certified products safeguard your investment.

High degree of acceptance on the market –
trust the market leader in tool identification.

Flexible: solution competence –
your ideas are our motivation.

We are complete providers –
Industrial RFID is just one of our many product ranges.

More than just components –
trained integrators create solutions for you.

See the Industrial Identification brochure for a large selection of products.
For additional information, visit
www.balluff.com/industrial-rfid

BALLUFF
SYSTEM INTEGRATION PARTNER

more added value

- Everything from a single source
- Certified partners – assured quality
- Benefit from our experience

Analysis
Integration
Planning
Documentation
Design/Development
Service

Optimal Integration of Industrial RFID Systems

Take advantage of our competent system integration partners

You would like to optimize your system and manufacturing processes with Balluff industrial RFID systems? Just take advantage of the knowledge of our qualified, specially trained integration partners.

Our partners will gladly provide support for:
– Integrating software in PLC or CNC systems
– Integrating hardware in systems and machines
– Retrofitting and modernizing existing systems
– Connecting with higher-level systems and networks
– Creating customer-specific user interfaces

More detailed information is available directly via the websites of our integration partners or simply contact us under the following address: **tecsupport@balluff.de**

BALLUFF
sensors worldwide

SYSTEM INTEGRATION PARTNER
RFID

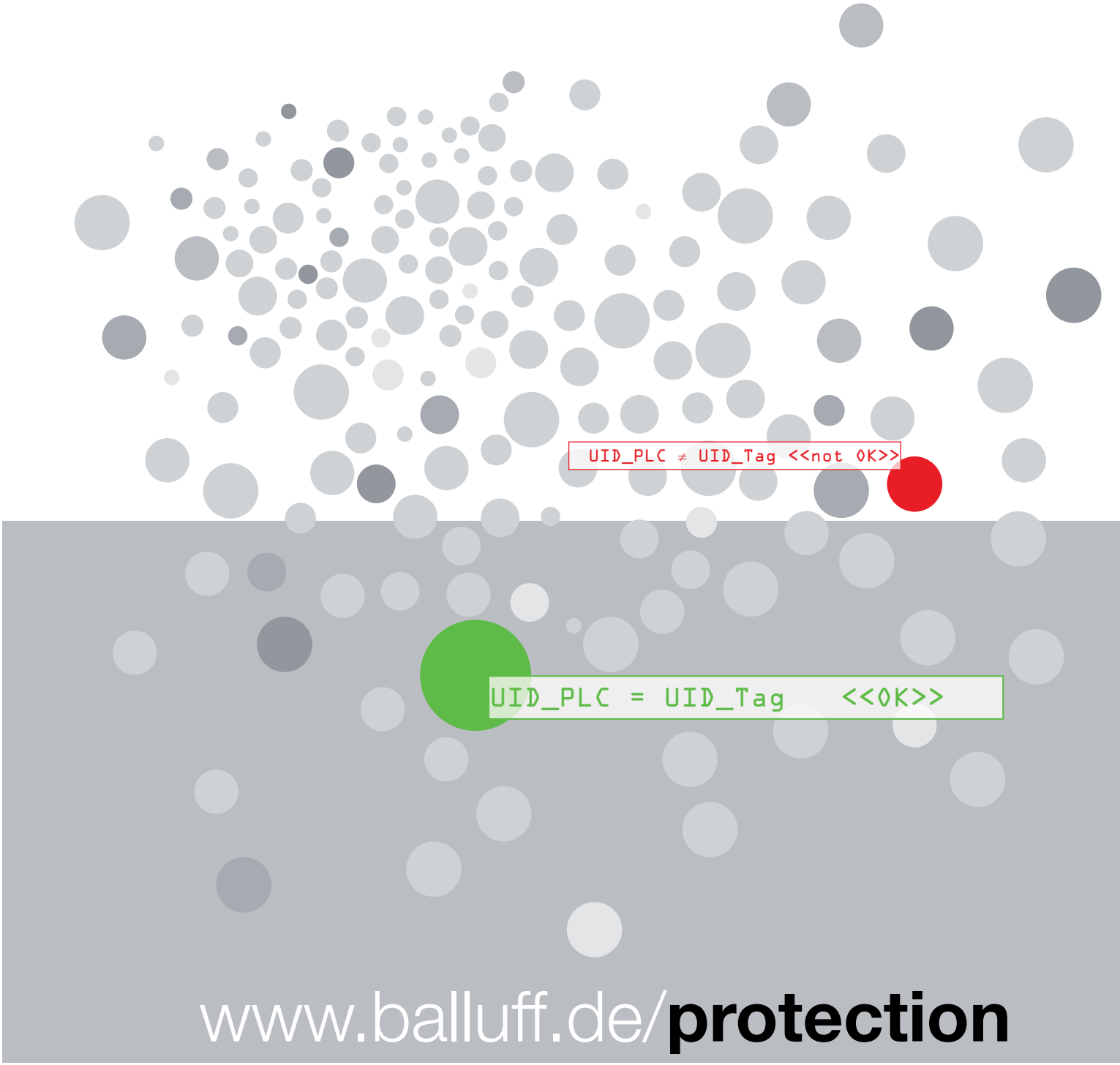
UID_PLC ≠ UID_Tag <<not OK>>
UID_PLC = UID_Tag <<OK>>
www.balluff.de/protection

Protecting Products and Know-how

Balluff is there

more added value

Product piracy is a significant threat to the innovation force and competitiveness of the capital goods industry. According to a VDMA survey from 2008, product piracy already affects two-thirds of the more than 3000 member companies. Today, aggregates, modules and even complete machines are being copied. This is reason enough for Balluff to actively participate in the "Product and know-how protection" working group of the VDMA.

For companies, the product piracy leads to a violation of patent and brand rights and to the loss of their good image. This is frequently accompanied by an enormous price pressure on the original. At the end of the day, it not only costs companies a lot of money, but it also threatens jobs.

Only a holistic approach that includes the areas technology, product, information, process and rights, can lead to a solution. Especially with respect to technologies and products, industrial RFID components from Balluff can be an important tool in identifying the original and tracking its further path.

- Recognizing piracy
- Securing quality
- Protecting your know-how

Applications
The use of RFID allows storing data directly at the object. This allows not only the identification of pirated copies, but also automating setup routines and increasing machine availability. By identifying security and quality-relevant parts, RFID supports you in securing your quality and ensuring security within the process. We will gladly show you the options that are relevant to you – contact us!

- www.balluff.de/**protection**

We will gladly demonstrate how you can protect your products and your know-how using RFID – just send us an e-mail: **protection@balluff.de**

reddot design award
winner 2012

BIS V Industrial RFID System

The new generation for more efficiency

New

The variable system for intelligence in a small space: connect up to four read/write heads to one evaluation unit
Make quick, contactless data communication noticeably more efficient with Industrial RFID BIS V from Balluff. Only BIS V from Balluff combines RFID and sensors. BIS V, along with the four antenna channels, has an integrated IO-Link master with the latest version, 1.1. The four antenna channels work completely independently of each other. This saves costs, as fewer evaluation units are needed. Through the IO-Link master you have a node for additional information available, so that you can connect further sensors and/or actuators directly and can create a simple network structure.

The high performance BIS V offers maximum convenience. Display and status LEDs support ease of use. And through its USB service interface, standard hardware, like a PC, is easy to connect.
All connections are easily accessible and completely pluggable.

- Function indicator: each read/write head connection has two LEDs for the status and operating state
- Eight monochrome LEDs show the bus status
- LCD indicators with control buttons: setting and displaying the Profibus address and displaying read data carrier UIDs
- USB connection: for fast commissioning without bus connection (reading and writing data carriers), update/upgrade of the evaluation unit or the read/write heads and calling up the operating menu as a PDF file
- Intelligent power plug for saving parameters on site
- Simple mounting on top-hat rails or extruded profiles

Typical applications for the combination of RFID evaluation units and sensors include identification tasks for material flow control in production systems, for conveyor systems in mechanical engineering, in assembly lines and electric suspension systems or in the entire field of intralogistics.

BIS V Industrial RFID System

The new generation for more efficiency

Description		BIS V RFID evaluation unit
Profibus	**Ordering code**	**BIS00T3**
	Part number	BIS V-6102-019-C001
EtherCAT	**Ordering code**	**in preparation**
	Part number	BIS V-6110-063-C002
Power supply		24 V DC ±10 % LPS Class 2
Residual ripple		≤ 10 %
Power supply		≤ 2 A
Ambient temperature T_a		0...+60 °C
Degree of protection as per IEC 60529		IP 65
Housing material		Cast zinc
Weight		800 g
Connection H1 - H4		M12 socket, 5-pin, A-coded
Power connection		7/8" plug, 5-pin
Application interface		IO-Link 1.1, USB 2.0
Application with read/write heads		BIS VM-3… and BIS VL-3…

CC link and **EtherNet/IP** will be available as additional interfaces in the second half of 2012.

The compact EMC-protected metal housing with small dimensions (170×60×40 mm) is perfectly integrated and simple to mount. In control cabinets or in the field up to IP 65, on a top-hat rail, or on a profile.

The BIS V industrial RFID system was developed and qualified according to the principles of GAMP® 5.
You can obtain more detailed information upon request at **rfidpharma@balluff.com**

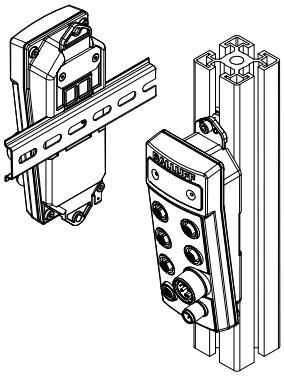

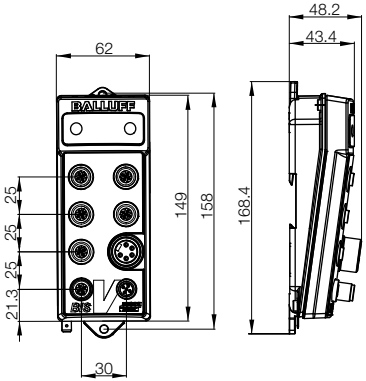

New

Description	HF read/write head BIS VM	HF read/write head BIS VM	HF read/write head BIS VM
Dimensions	**M30×1.5**	**80×80×40 mm**	**80×80×40 mm**
Mounting in steel	non-flush	non-flush	non-flush
Antenna type	round	round	Rod
Ordering code	**BIS00RF**	**BIS00T0**	**BIS00T2**
Part number	BIS VM-300-001-S4	BIS VM-301-001-S4	BIS VM-351-001-S4
Power supply	≤ 150 mA	≤ 150 mA	≤ 150 mA
Power supply	18...30 V DC	18...30 V DC	18...30 V DC
Residual ripple	≤ 1.3 V_{ss}	≤ 1.3 V_{ss}	≤ 1.3 V_{ss}
Ambient temperature T_a	–25...+55 °C	–25...+55 °C	–25...+55 °C
Degree of protection as per IEC 60529	IP 67 (with connector)	IP 67 (with connector)	IP 67 (with connector)
Function indicator	yes	yes	yes
Housing material	Nickel-plated CuZn (brass)	PBT	PBT
Weight	100 g	190 g	360 g
Connection	M12 connector, 4-pin	M12 connector, 4-pin	M12 connector, 4-pin

Please take the corresponding write/read distance from the Industrial Identification catalog, Chapter BIS M (BIS VM-300... corresponds to BIS M-300...).

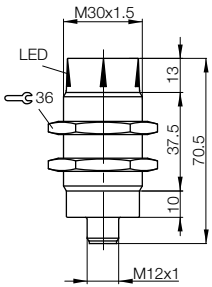

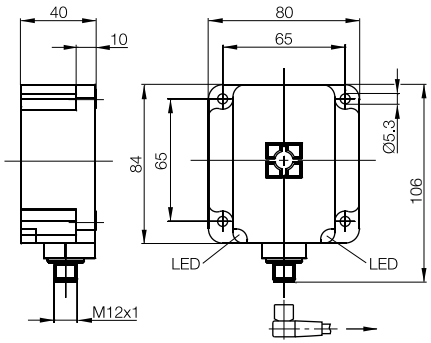

Securing clamp included in the scope of delivery.

Please order matching plug connectors separately.
(Unshielded cable can be used only for lengths up to 3 m. Cable lengths over 3 m have to be shielded.)

Plug side	Socket side	Cable material	Color	BCC039H	BCC039R	BCC03A8	BCC03AJ	BCC039J	BCC039T	BCC03A9	BCC03AK	BCC039K	BCC039U	BCC03AA	BCC03AL	BCC039L	BCC039W	BCC03AC	BCC03AM	BCC039M	BCC039Y	BCC03AE	BCC03AN
				0.3 m				0.6 m				1 m				1.5 m				2 m			
straight	straight	PUR	black	■				■				■				■				■			
straight	angled	PUR	black		■				■				■				■				■		
angled	straight	PUR	black			■				■				■				■				■	
angled	angled	PUR	black				■				■				■				■				■

BIS V Industrial RFID System

The new generation for more efficiency

HF read/write head BIS VM	HF read/write head BIS VM	HF read/write head BIS VM	HF read/write head BIS VM
25x50x10 mm	**M12×1**	**M18×1**	**25×50×10 mm**
non-flush	non-flush	non-flush	non-flush
round	round	round	Rod
BIS00T9	**BIS00T7**	**BIS00T8**	**BIS00T6**
BIS VM-305-001-S4	BIS VM-306-001-S4	BIS VM-307-001-S4	BIS VM-352-001-S4
≤ 150 mA	≤ 150 mA	≤ 150 mA	≤ 150 mA
18...30 V DC	18...30 V DC	18...30 V DC	18...30 V DC
≤ 1.3 V_{ss}	≤ 1.3 V_{ss}	≤ 1.3 V_{ss}	≤ 1.3 V_{ss}
–25...+55 °C	–25...+55 °C	–25...+55 °C	–25...+55 °C
IP 67 (with connector)	IP 67 (with connector)	IP 67 (with connector)	IP 67 (with connector)
yes	yes	yes	yes
AlMgSi 0.5/ABS-GF16	AlMgSi 0.5/nickel-plated CuZn	AlMgSi 0.5/nickel-plated CuZn	AlMgSi 0.5/ABS-GF16
200 g	190 g	220 g	370 g
M12 connector, 4-pin	M12 connector, 4-pin	M12 connector, 4-pin	M12 connector, 4-pin

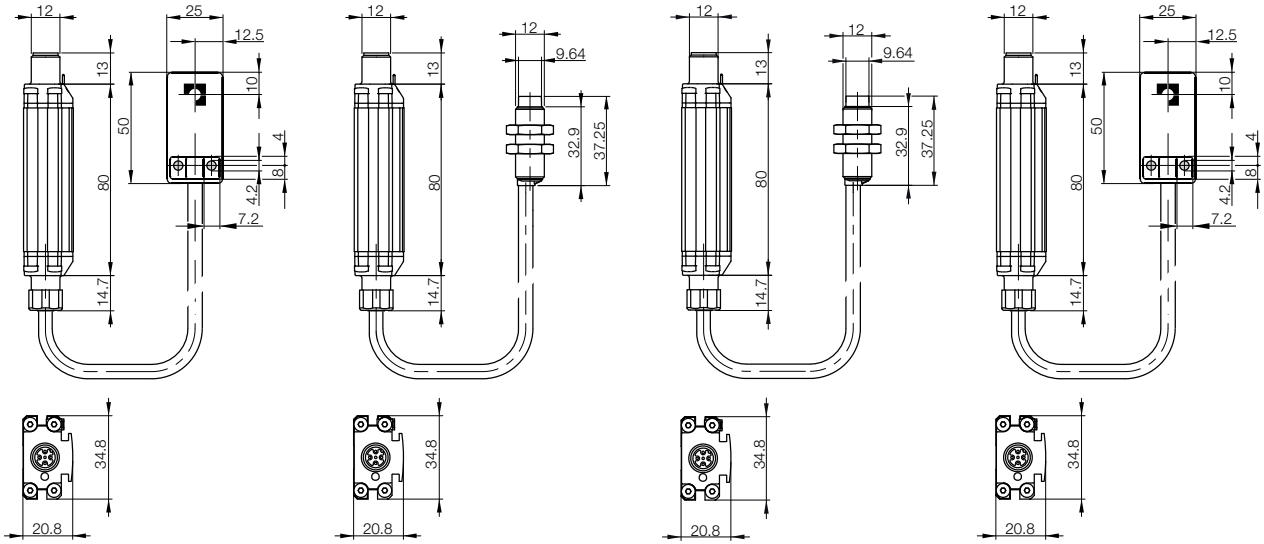

more added value

- Distances up to 275 mm offer greater flexibility, regardless of the background surface.
- FRAM data carriers ensure virtually unlimited read/write cycles.
- Can be used all over the world thanks to ISO-15693-conformity.
- Status indicators mounted directly on the antenna housing are a valuable feature.
- The robust housing guarantees reliable operation in harsh environments.
- 100 % RFID quality means greater reliability.

Application areas
The advantages of the HF antenna BIS M-350 become immediately obvious in all applications where the data carrier is mounted directly on metal or the material in the immediate vicinity cannot be predetermined accurately, for example when products are transported in a crate. BIS M sensors simply ignore the different materials, which means that water, oil, dust and metal have absolutely no effect on the high-performance data carriers.

A Powerful High-frequency Package Ensures Maximum Transparency

HF antenna BIS M-340 and BIS M-350

One of the challenges of intralogistics is the transportation of constantly changing materials. However, smooth operation and transparent processes are still required in spite of the wide variety of different products. A requirement that is not always easy for RFID systems because metallic surfaces, fluids and dirt really put these systems to the test. Not the HF antenna BIS M-350, however. The antenna is fitted with optimized data carriers that help overcome difficulties of this kind with ease while reliably ensuring maximum transparency. All data can be traced at any time.

The following system versions are available:

- BIS M 350 and 450 (rod antenna)
- BIS M 340 and 440 (circular antenna)

Connection to processor	**Ordering code**	**BIS00LZ**		**BIS00N6**	
	Part number	BIS M-350-001-S115		BIS M-340-001-S115	
Connection to controller (TCP/IP)	**Ordering code**	**BIS00R0**		**BIS00PZ**	
	Part number	BIS M-450-039-001-06-ST2		BIS M-440-039-001-06-ST2	
Dimensions		240×120×60 mm		240×120×60 mm	
Installation type (steel)		with clear zone		with clear zone	
Antenna type		**Rod**		**Circular**	
Degree of protection per IEC 60529		IP 65		IP 65	
Ambient temperature T_a		0...+55 °C		0...+55 °C	
Housing material		PC		PC	
Appropriate data carrier		**BIS M-153-02/A**		**BIS M-107-03/L-H200**	
Clear zone for data carrier		> 240×480 mm		> 240×480×120 mm	
Read/write distance		0...275 mm		0...100 mm	
Offset at distance	Dimensions	x	y	x	y
	0 mm	±200 mm	±100 mm	±50 mm	±100 mm
	25 mm	±200 mm	±100 mm	±50 mm	±100 mm
	50 mm	±200 mm	±100 mm	±50 mm	±95 mm
	75 mm	±200 mm	±100 mm	±45 mm	±85 mm
	100 mm	±200 mm	±100 mm	±40 mm	±75 mm
	150 mm	±200 mm	±100 mm		
	200 mm	±175 mm	±100 mm		
	250 mm	±100 mm	±100 mm		

Appropriate data carrier
BIS M-153 and BIS M-107

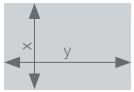

more added value

The Balluff BIS-M System combines advantages such as the fully flush installation of data carriers in steel and absolute data reliability with important properties such as:

- Large reading/writing distances of up to 130 mm
- Fast data communication from data carrier via processor to controller
- Seamless integration in intralogistics applications through global standard ISO 15693/14443
- Smallest possible antenna design sizes

The components are specially designed and manufactured for use with transfer systems from Bosch-Rexroth (TS1 and TS2). The design not only takes RFID communication into consideration but also simple assembly.
Can be installed from the kit, depending on the application.
Thanks to the robust systems and 20 years of experience with RFID, the described solution is a must for every automation task.

Industrial RFID in Transfer Systems

High data reliability and extremely simple assembly

Ordering code	BIS00NZ	BIS00P1	BIS00M2	BIS004A	
Part number	BIS M-191-02/A	BIS M-154-03/A	BIS M-152-03/A	BIS M-122-02/A	
Dimensions	24×24×21 mm	Ø 8×35 mm	Ø 4×22 mm	Ø 10×4.5 mm	
Antenna type	Rod	Rod	Rod	Circular	
Capacity	2000 bytes	112 bytes	112 bytes	2000 bytes	
Working/storage temperature	–30...+70 °C/–30...+85 °C	–25...+50 °C/–30...+60 °C	–25...+50 °C/–30...+60 °C	0...+70 °C/–25...+85 °C	
Degree of protection	IP 67	IP 67	IP 67	IP 67	
Installation	non-metal	non-metal	non-metal	non-metal	in metal
Read/write distance					
BIS M-305				0...7 mm	0...5 mm
BIS M-307				0...7 mm	0...5 mm
BIS M-352	0...14 mm	0...10 mm	0...10 mm		

Ordering code	BIS00NY	BIS00NK	BIS00P2
Part number	BIS M-352-001-S115	BIS M-305-001-S115	BIS M-307-001-S115
Read/write head			
Dimensions	25×50×10 mm	25×50×10 mm	M18×1
Antenna type	Rod	Circular	Circular
Working/storage temperature	0...+70 °C/–20...+85 °C	0...+70 °C/–20...+85 °C	0...+70 °C/–20...+85 °C
Degree of protection	IP 67	IP 67	IP 67
Cable	0.5 m PUR	0.5 m PUR	0.5 m PUR
Connection to	Remote electronics	Remote electronics	Remote electronics
Remote electronics			
Voltage	24 V DC +10 %/–20 % including ripple		
Current	< 50 mA no load		
Working/storage temperature	0...+70 °C/–20...+85 °C		
Degree of protection	IP 67		
Connection to/interface	Processor/M12 connector, 8-pin		

more added value

- Flexible use due to a wide range of different combinations of data carriers and antennas
- Up to two antennas per processor
- Tested quality with CC-Link certificate
- Make use of timesaving features: Connector-based cabling, robust housing that is easy to install, preassembled function modules and diagnostics function that enable easy commissioning

The CC Link field bus protocol ensures quick, robust communication between different stations. The new BIS M-699 processor can now be used directly in the field. Conformity with standards ISO 15693 and 14443 as well as globally approved frequency of 13.56 MHz allow worldwide use of this CC-Link processor.

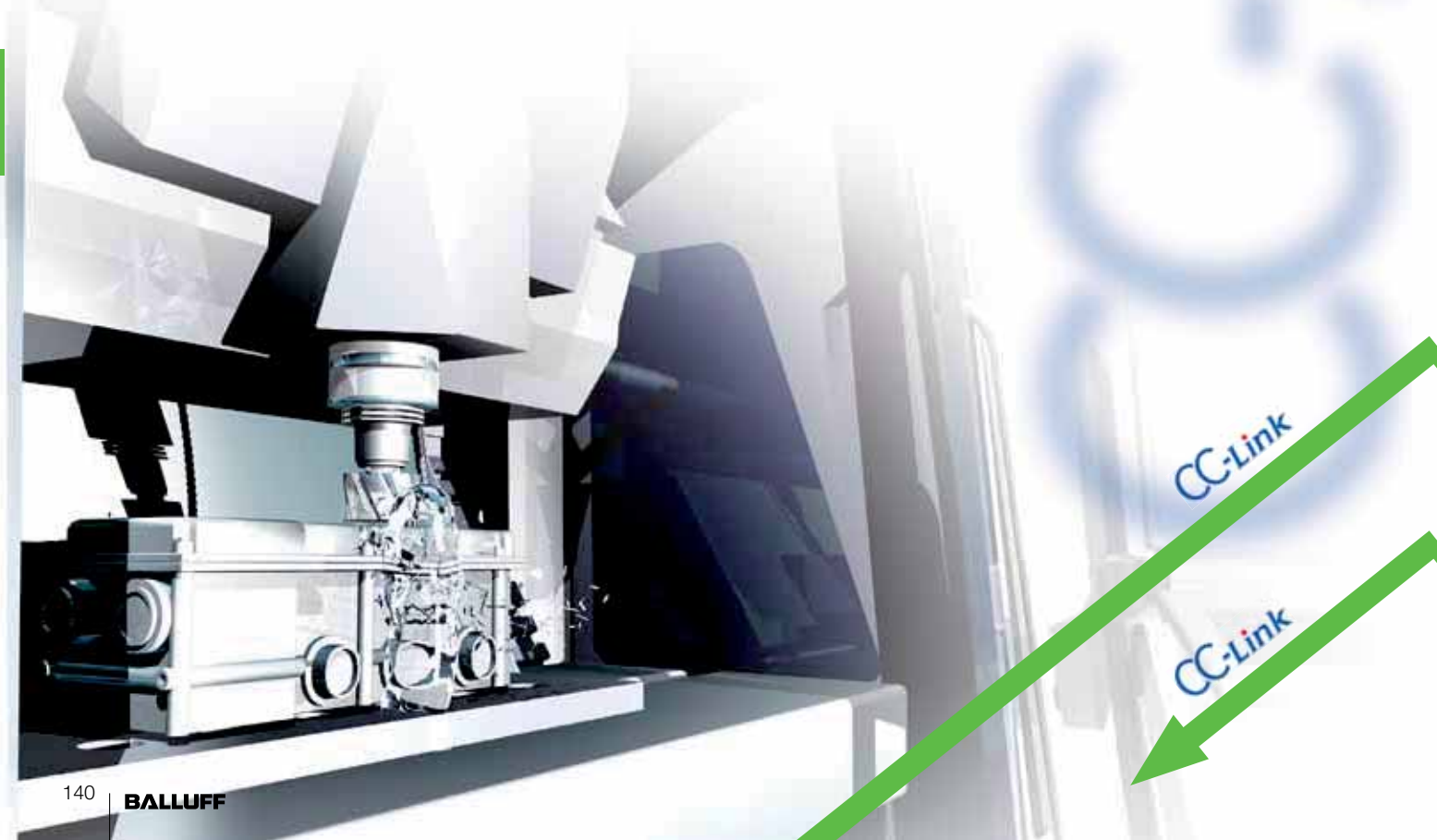

Processor with CC-Link for 13.56 MHz

Suitable for every environment

Model	BIS M-699
Description	Processor
Ordering code	**BIS00LY**
Part number	BIS M-699-052-050-03-ST11
Dimensions	200×100×60 mm
Antenna ports	2
Standards	ISO 15693/14443
Interface	CC-Link
Degree of protection per IEC 60529	IP 65
Housing material	Metal

The HF processor BIS M-699 with 13.56 MHz is used directly in the field in all applications where robust controllers are connected directly to CC-Link. Thanks to the wide variety of special data carriers, for example, optimized for flush installation in metal, for temperatures up to 200 °C or for the maximum distance, this HF processor can be used in almost all industrial sectors.

more added value

- Easy startup with function modules at no extra cost
- Direct integration into the controller eliminates the need for decentralized wiring
- Function indicator directly on the terminals
- Degree of protection IP 40

The HF processor BIS M-688-001 with 13.56 MHz was developed specially for integration in the MELSEC-Q series from Mitsubishi. All read/write heads from the BIS M series can be connected to the 2-channel card. A wide range of variations provides the right configuration for every application.

Mitsubishi MELSEC-Q series

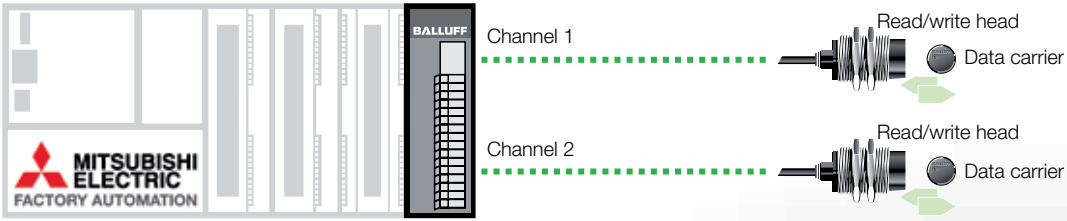

Balluff processor BIS M-688

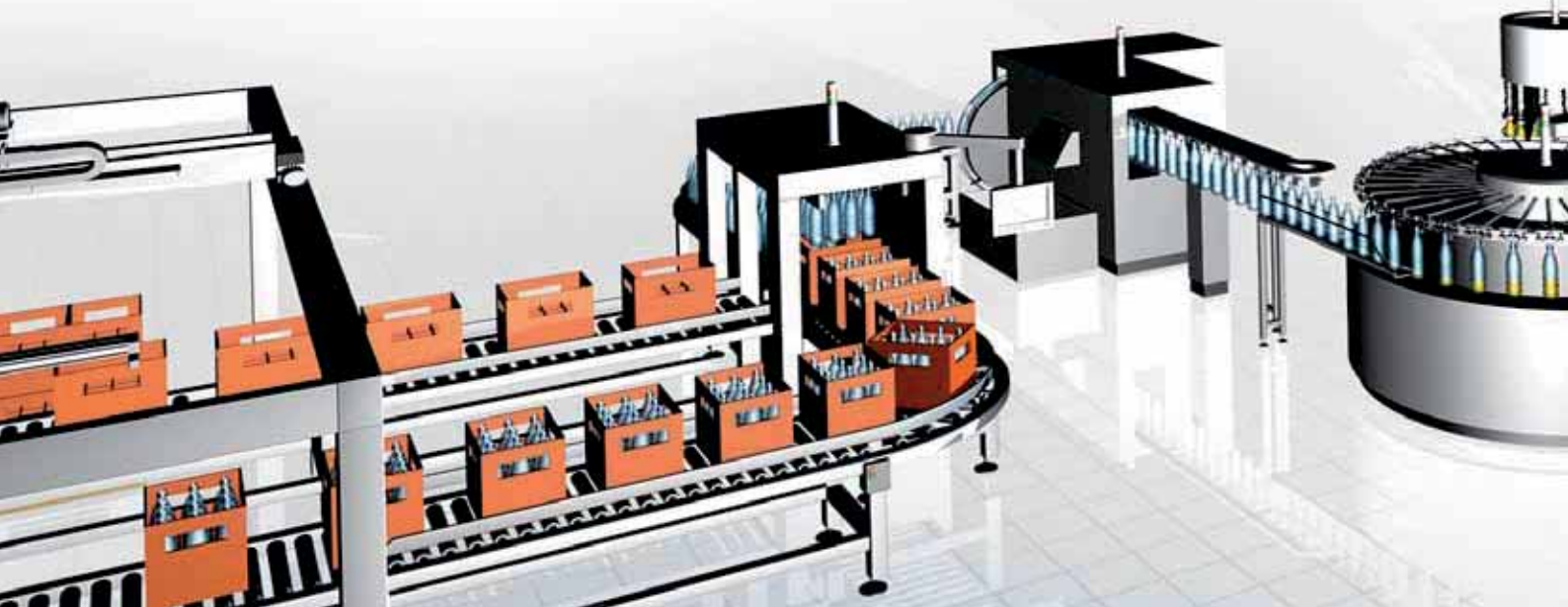

Processor for Mitsubishi Controller

Identification without diversions

The MELSEC-Q series enables the user to select the best combination of CPU modules as well as communication, special or I/O modules for configuration of tailored systems. The use of RFID ensures the best possible individual solutions. And in all areas where the highest possible level of flexibility is required. RFID makes processes even more transparent and effective.

Model	BIS M-688
Description	Processor
Ordering code	**BIS00HM**
Part number	BIS M-688-001
Dimensions	98×90.5×27 mm
Frequency	13.56 MHz
Antenna ports	2
Standards	ISO 15693/14443
Interface	Integrated directly in Mitsubishi system Q
Degree of protection per IEC 60529	IP 40

more added value

- High degree of protection – where it is needed
- Data carrier in screw form – simplest form of installation
- Large distances – for more flexibility in your application
- ISO 15693 – applicable worldwide

It is not always possible to use a workpiece carrier in the production process. If the information still has to be coupled directly to the object, it is essential to install the data carrier at the object without any difficulties and to quickly remove it again after it has fulfilled its task. A screw is ideally suited for this purpose.
The new data carrier in accordance with ISO 15693 with a storage capacity of 2000 bytes is perfectly suited, for example, for parts tracking in manufacturing processes and for closed-loop applications in which it is always being used recurrently. Varied application options also open up for the identification of manufacturing equipment, such as pressing tools. Thanks to the large reading distances, the data screw in IP 68/x9K provides high installation flexibility.

Ordering code	**BIS00M8**	**BIS00M9**	**BIS00MA**
Part number	BIS M-140-02/A-M8	BIS M-140-02/A-M6	BIS M-140-02/A
Mounting	M8 thread	M6 thread	Clip variant without screw
Memory capacity read/write	2000 bytes	2000 bytes	2000 bytes
Degree of protection per DIN EN 40050	IP 68/x9K	IP 68/x9K	IP 68/x9K
Storage temperature range	–25...+95 °C	–25...+95 °C	–25...+95 °C

HF Data Screw BIS M

Better safe than sorry – "screwed connection" data

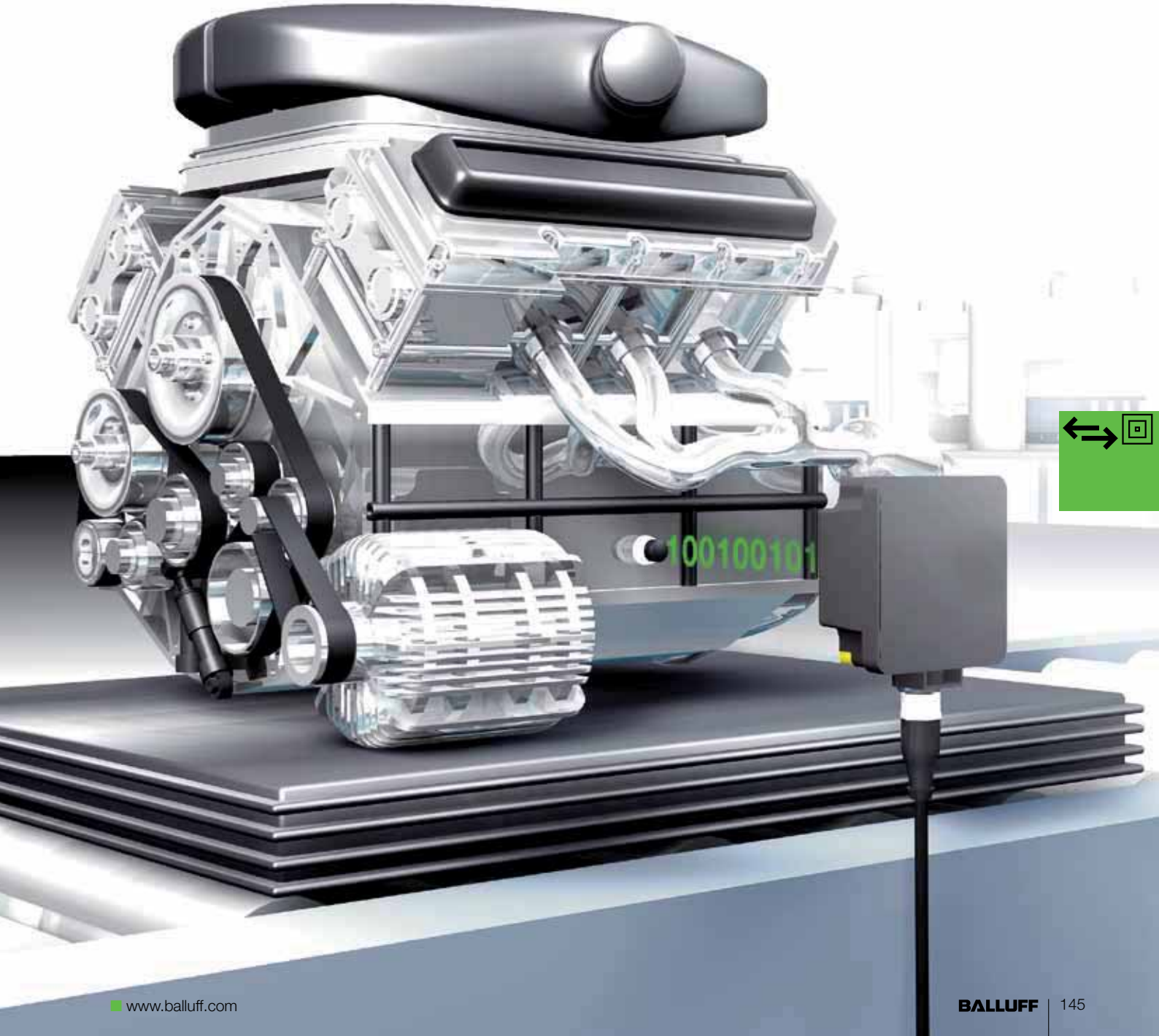

Industrial Networking and Connectivity

IO-Link
CC-Link
EtherNet/IP
PROFINET
PROFIBUS
Modules with Display
Webserver

Passive Splitters
Connectors
Dynamic Sensor Control
Inductive Couplers
Power Supplies

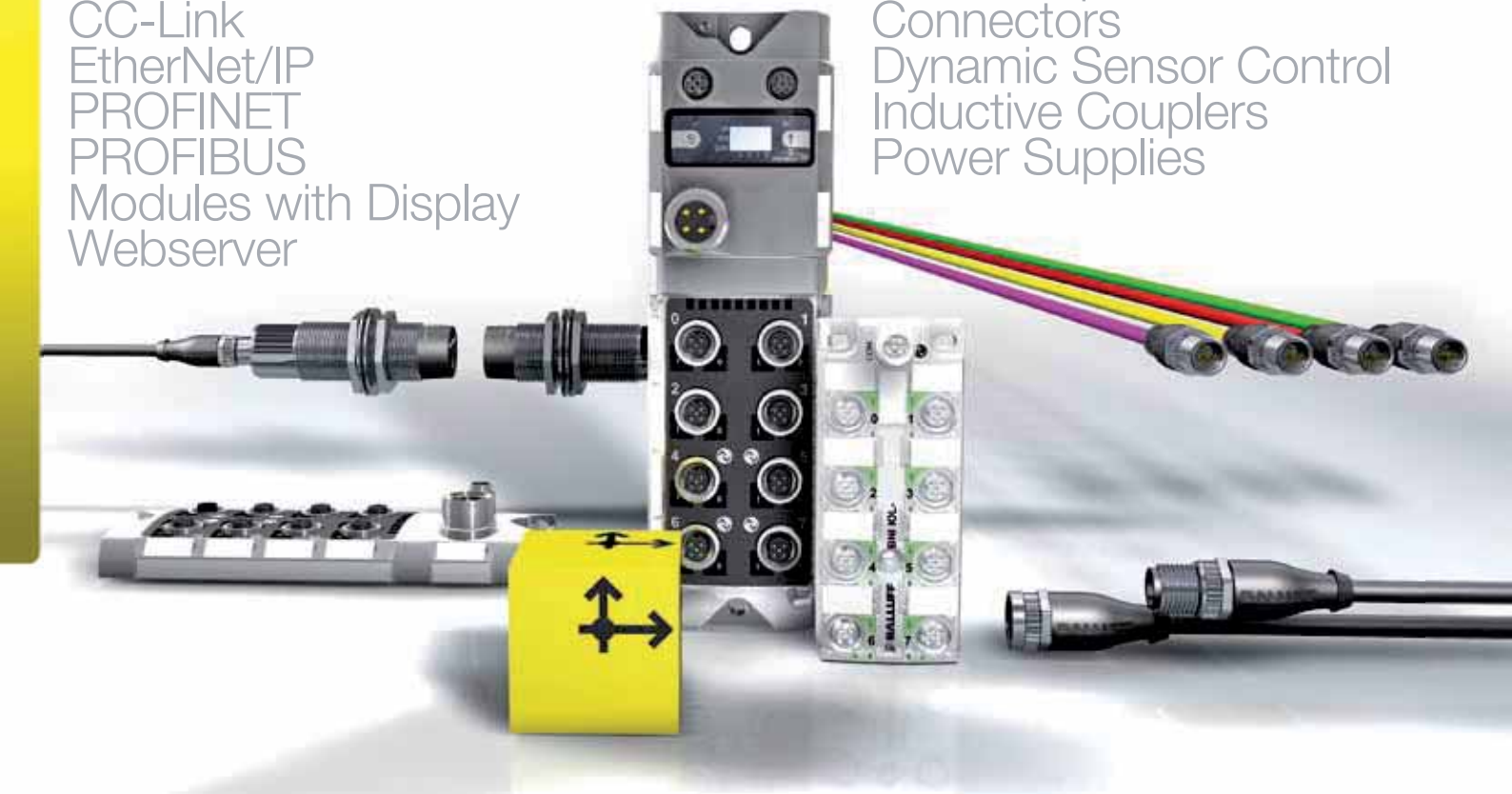

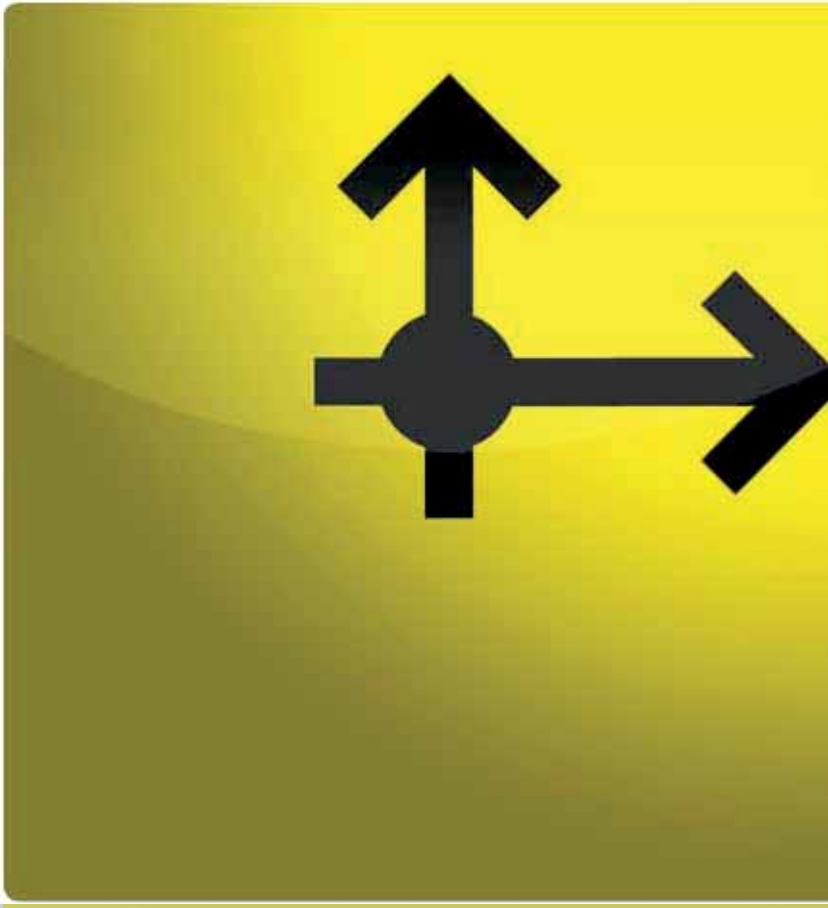

IO-Link offers potential for optimization- and cost savings for the following areas:

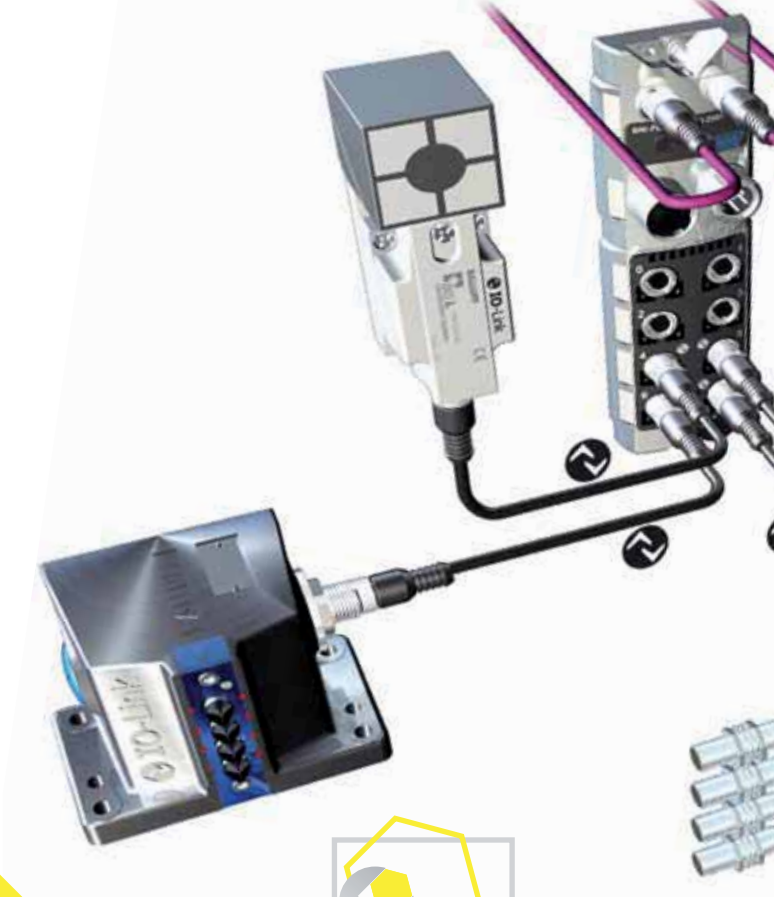

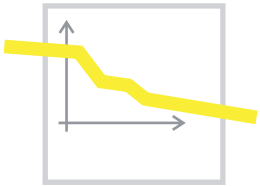

Lower costs

Logistics and planning

- Simplified stocking thanks to uniform, universal interface for all variants
- Reduced planning and administration costs through reduced variety of versions and interfaces
- Lower costs, as simple, unshielded industrial cables can be used
- Increased investment security due to an open standard valid for all manufacturers
- Well equipped for future requirements due to the greatest possible flexibility in project planning

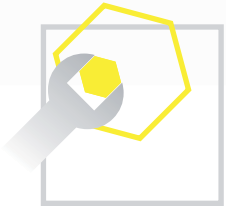

Less maintenance

Service and maintenance

- Automatic readjustment requires less supervision
- Reduced machine downtimes through reliable error detection and localization, fast sensor replacement and centralized data configuration
- Anticipatory error detection reduces maintenance

Industrial Networking and Connectivity

IO-Link – network technology for reliable data transfer and greater efficiency

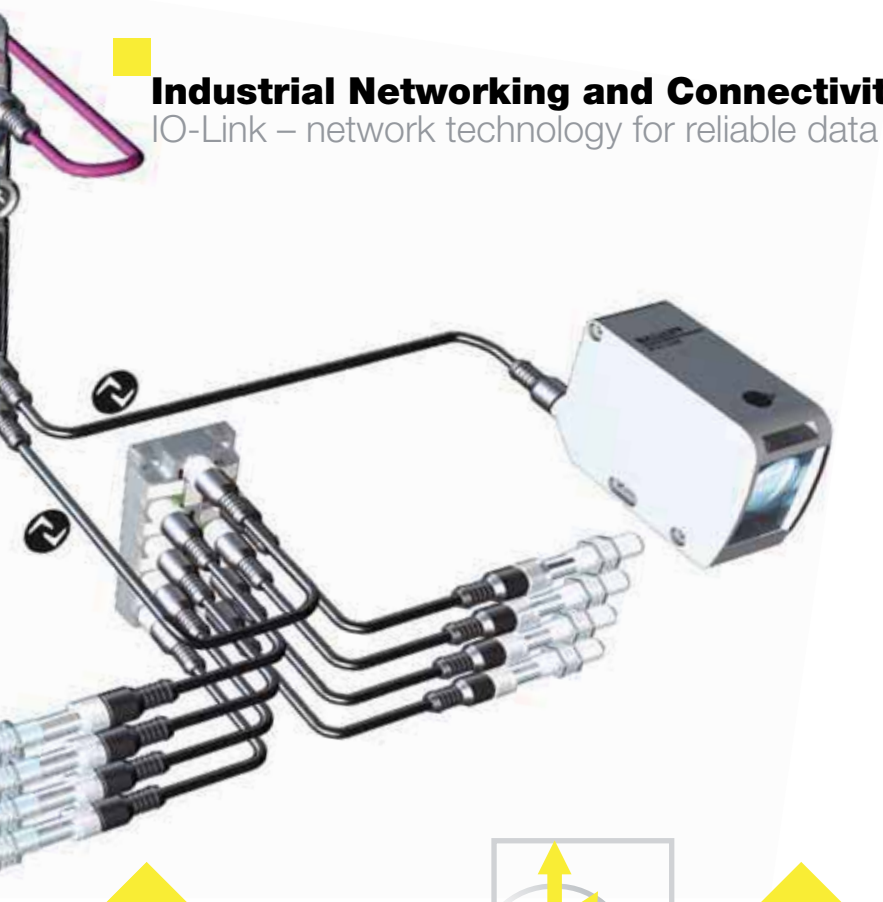

Reduced time outlay

Shorter downtime

Installation and commissioning

- Uniform interface and the use of traditional, unshielded industrial cables for simple integration into the fieldbus environment
- Reduced commissioning times, since configuration is performed by the controller
- Incremental expansion through simultaneous use of digital and analog sensors/actuators

Runtime

- Direct data transmission for a high degree of automation precision
- Configuration is performed centrally by the controller – even over long distances
- Reliable readjustment, since data monitoring runs continuously (e.g. maintaining a specified level or a switching hysteresis)
- Fast sensor replacement, quick format changes thanks to centralized setting of parameters
- Standard and IO-Link sensors/actuators can be used simultaneously

more added value

- Robust housing
- Powerful inputs
- Powerful outputs
- Extended temperature range

The metal sensor hubs in a robust housing are suitable for installation in extremely harsh industrial environments such as machine tool plants, steel works and so on.
Based on M12 connectors, metal sensor hubs are simple to install and fulfill demanding requirements for cost-effective installation and maintenance.

Port-specific single-channel monitoring detects short circuits, overloading at the port and offers a completely unique degree of selective diagnostics for devices with this functionality.

Each input can be parameterized as normally closed or normally open using a parameter set, increasing the flexibility of your installation. Antivalent DESINA sensors can also be connected to the DI16 sensor hub with ease.

The BNI IOL-302-000/S01-Z013 version combines two modules in one while achieving maximum functionality and flexibility.
The maximum sensor load current is 500 mA, which is suitable for operating sensors with a high degree of consumption. If configured as an output, up to 2 A is available at the port. This is ideal for the use of hydraulic valves with a high consumption level.

Clearly visible status LEDs
Low-quality LEDs that are often difficult to identify under demanding production conditions perform poorly when used in high-speed applications. Unlike Balluff status LEDs, which are large, bright, highly visible and provide maximum assistance. Balluff modules help you complete setup and maintenance tasks and reduce machine downtimes with ease.

Powerful and safe outputs
With an output current of up to **2 amps**, Balluff output modules are capable of driving almost any load. Each output also offers an overload protection with LED indicator and a memory feature for easy troubleshooting.

Robust, solid metal housing
The fully encapsulated housing can withstand impacts, debris, corrosive fluids, incorrect assembly as well as people treading on it.

Inputs with high density
All Balluff input blocks offer two input points for each connector, accessed via a V splitter. A Desina output is also optionally available via pin 2.

Innovative housing design
The extra-flat profile reduces potential dangers posed by cables. Rounded corners offer highly visible locations for channel markers and two mounting points are sufficient to secure the robust metal housing.

IO-Link

Metal M12 sensor hubs, 16 digital inputs/outputs

IO-Link	Device	Device	Device
Type	16× DI	16× DI/DO	16× DI/DO
Ordering code	**BNI0032**	**BNI003U**	**BNI0035**
Part number	BNI IOL-104-000-Z012	BNI IOL-302-000-Z012	BNI IOL-302-000-Z013
Operating voltage U_B	18...30 V DC	18...30 V DC	18...30 V DC
Function indicator IO-Link RUN	Green LED	Green LED	Green LED
Power indicator	Green LED	Green LED	Green LED
Connection: IO-Link	M12, A-coded, male	M12, A-coded, male	M12, A-coded, male
Connection: I/O ports	M12, A-coded, female	M12, A-coded, female	M12, A-coded, female
Connection U_O	via IO-Link interface	via IO-Link interface	via 7/8" connector
Connection U_A		via IO-Link interface	via 7/8" connector
No. of I/O ports	8	8	8
Number of inputs	16	Max. 16	Max. 16
Number of outputs	0	Max. 16	Max. 16
Configurable	No	Yes	Yes
Single-channel monitoring	No	No	No
Max. load current sensors/channel	100 mA	100 mA	500 mA
Max. load current actuators/channel		0.5 A	2 A
Port status indicator	Yellow/red LED	Yellow/red LED	Yellow/red LED
Total current U_B	< 1.4 A	< 1.4 A	9 A
Total current U_A		< 1.4 A	9 A
Degree of protection per IEC 60529	IP 67 (when connected)	IP 67 (when connected)	IP 67 (when connected)
Operating temperature T_a	–5...+70 °C	–5...+70 °C	–5...+70 °C
Storage temperature range	–25...+70 °C	–25...+70 °C	–25...+70 °C
Mounting	2 mounting holes	2 mounting holes	2 mounting holes
Dimensions (L×W×H)	181×68×36.9 mm	181×68×36.9 mm	181×68×36.9 mm
Housing material	Nickel-plated Gd-Zn	Nickel-plated Gd-Zn	Nickel-plated Gd-Zn

IO-Link				
Max. cycle time		2.5 ms	10 ms	10 ms
IO-Link process data length		2 input bytes	2 input bytes/2 output bytes	2 input bytes/2 output bytes
Indicators	Communication	Green LED, pulsing	Green LED, pulsing	Green LED, pulsing
	Error	Red LED	Red LED	Red LED

All hubs include four screw plugs and label set.

more added value

Selectable IO-Link sensor hubs

Simple handling – lower costs – universal use
Selectable IO-Link sensor hubs from Balluff are a market innovation. The user can write and read his own, user-defined identification data. They are, therefore, particularly economical when it is necessary to encode tools. In addition, they are easy to use.

As an interface for interchangeable tools, they offer clearly calculable benefits:

- Quick, reliable format changes
  The hub and data are simply replaced together with the tool and the information is directly passed on to the controller via IO-Link, ensuring continuous process control.
- Quick, economical installation
  Complex multipole cables are no longer required because simple, unshielded, three-core cables are sufficient. Installation is not only fast, but also very economical.
- Speedy setup
  With simple coding via the controller, new tools are made available on an ad hoc basis.

Additional advantages

- IP 67 sensor hubs are extremely versatile.
- The hubs have 16 inputs with single-channel monitoring that provide detailed diagnostic data relating to overloads, short circuits and cable breaks in an instant. In a worst case scenario, the user can intervene immediately and benefit from reduced downtimes.
- You can easily monitor the power supply and function with the convenient LED indicator. Setup, maintenance and downtimes are addressed more quickly.

Selectable sensor hubs from Balluff represent more than just lower costs, less work and reduced downtimes. Selectable sensor hubs from Balluff also stand for greater efficiency.

IO-Link	Device	
Type	16× DI	
Ordering code	**BNI0039**	
Part number	BNI IOL-104-S01-Z012	
Operating voltage U_B	18...30 V DC	
Function indicator IO-Link RUN	Green LED	
Power indicator	Green LED	
Connection: IO-Link	M12, A-coded, male	
Connection: I/O ports	M12, A-coded, female	
Connection U_O	via IO-Link interface	
Connection U_A		
No. of I/O ports	8	
Number of inputs	16	
Number of outputs	0	
Configurable		
Single-channel monitoring	Yes	
Max. load current sensors/channel	100 mA	
Max. load current actuators/channel		
Port status indicator	Yellow/red LED	
Total current U_B	< 1.4 A	
Total current U_A		
Degree of protection per IEC 60529	IP 67 (when connected)	
Operating temperature T_a	–5...+70 °C	
Storage temperature range	–25...+70 °C	
Mounting	2 mounting holes	
Dimensions (L×W×H)	181×68×36.9 mm	
Housing material	Nickel-plated Gd-Zn	

IO-Link

Max. cycle time		10 ms
IO-Link process data length		4 input bytes
Indicators	Communication	Green LED, pulsing
	Error	Red LED

All hubs include four screw plugs and label set.

IO-Link

Metal M12 sensor/actuator hubs, single-channel monitoring

	Device	Device	Device	Device
	16× DI	16× DI/DO	16× DI/DO	16× DI/DO
	BNI003T	**BNI003C**	**BNI003A**	**BNI0048**
	BNI IOL-104-S01-Z012-C01	BNI IOL-302-S01-Z012	BNI IOL-302-S01-Z013	BNI IOL-302-S01-Z013-C01
	18...30 V DC	18...30 V DC	18...30 V DC	18...30 V DC
	Green LED	Green LED	Green LED	Green LED
	Green LED	Green LED	Green LED	Green LED
	M12, A-coded, male	M12, A-coded, male	M12, A-coded, male	M12, A-coded, male
	M12, A-coded, female	M12, A-coded, female	M12, A-coded, female	M12, A-coded, female
	via IO-Link interface	via IO-Link interface	via 7/8" connector	via 7/8" connector
		via IO-Link interface	via 7/8" connector	via 7/8" connector
	8	8	8	8
	16	Max. 16	Max. 16	Max. 16
	0	Max. 16	Max. 16	Max. 16
		Yes	Yes	Yes
	Yes	Yes	Yes	Yes
	100 mA	100 mA	500 mA	500 mA
		0.5 A	2 A	2 A
	Yellow/red LED	Yellow/red LED	Yellow/red LED	Yellow/red LED
	< 1.4 A	< 1.4 A	9 A	9 A
		< 1.4 A	9 A	9 A
	IP 67 (when connected)	IP 67 (when connected)	IP 67 (when connected)	IP 67 (when connected)
	–5...+70 °C	–5...+70 °C	–5...+70 °C	–5...+70 °C
	–25...+70 °C	–25...+70 °C	–25...+70 °C	–25...+70 °C
	2 mounting holes	2 mounting holes	2 mounting holes	2 mounting holes
	181×68×36.9 mm	181×68×36.9 mm	181×68×36.9 mm	181×68×36.9 mm
	Nickel-plated Gd-Zn	Nickel-plated Gd-Zn	Nickel-plated Gd-Zn	Nickel-plated Gd-Zn

	15 ms	25 ms	25 ms	30 ms
	6 input bytes	8 input bytes/2 output bytes	8 input bytes/2 output bytes	10 byte input/2 byte output
	Green LED, pulsing	Green LED, pulsing	Green LED, pulsing	Green LED, pulsing
	Red LED	Red LED	Red LED	Red LED

more added value

- Robust housing
- Powerful inputs
- Powerful outputs
- Extended temperature range
- Modules with reliable deactivation mechanism

If you wish to depict standard I/Os or safety I/Os in a fieldbus topology, the issue of safety becomes increasingly important for network/system integration.

Type BNI IOL-252/256 IO-Link actuator hubs fulfill requirements relating to the "passive safety" of outputs following safe deactivation in accordance with Machinery Directive 2006/42/EC, EN 954-1 category 3, EN 13849-1, EN 62061 SIL2.

The I/O block is divided into two galvanically isolated segments in order that two separately switching safety circuits can be implemented using one module.
The functions of the IO-Link system concept are extended considerably as a result. The IO-Link fulfills the requirements for a holistic approach and simultaneously reduces the number of components and guarantees simpler installation.

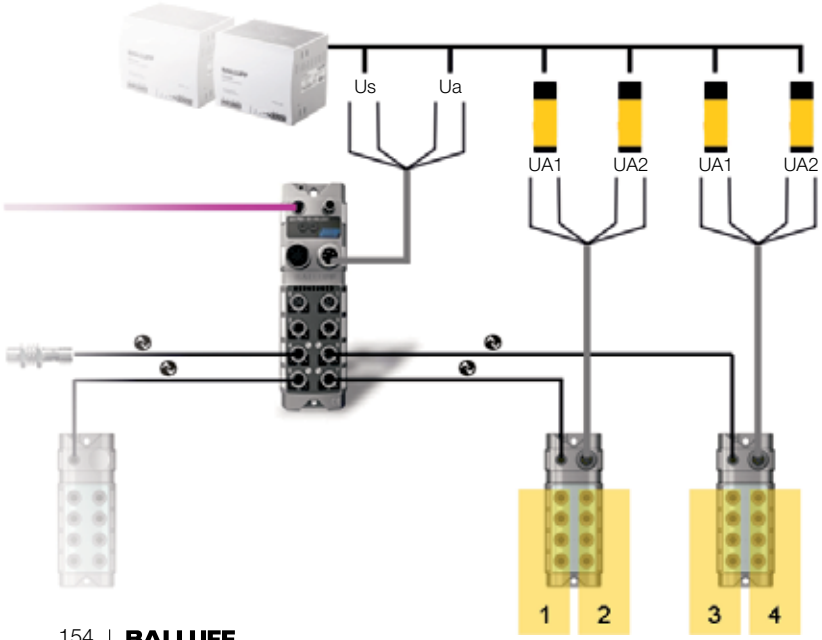

IO-Link

IO-Link	
Type	
Ordering code	
Part number	
Operating voltage U_B	
Function indicator IO-Link RUN	
Power indicator	
Connection: IO-Link	
Connection: I/O ports	
Connection U_O	
Connection U_A	
No. of I/O ports	
Number of outputs	
Configurable	
Single-channel monitoring	
Number of output circuits	
Outputs per output circuit	
Single-channel monitoring	
Max. load current actuators/channel	
Port status indicator	
Total current U_B	
Total current U_A	
Degree of protection per IEC 60529	
Operating temperature T_a	
Storage temperature range	
Mounting	
Dimensions (L×W×H)	
Housing material	

IO-Link

Max. cycle time		
IO-Link process data length		
Indicators	Communication	
	Error	

IO-Link

Metal M12 actuator hubs, single-channel monitoring

	Device	Device	Device	Device
	2× 4×DO	2× 4×DO	2× 8×DO	2× 8×DO
	BNI0033	**BNI0034**	**BNI003W**	**BNI003Y**
	BNI IOL-252-000-Z013	BNI IOL-256-000-Z013	BNI IOL-252-S01-Z013	BNI IOL-256-S01-Z013
	18...30 V DC	18...30 V DC	18...30 V DC	18...30 V DC
	Green LED	Green LED	Green LED	Green LED
	Green LED	Green LED	Green LED	Green LED
	M12, A-coded, male	M12, A-coded, male	M12, A-coded, male	M12, A-coded, male
	M12, A-coded, female	M12, A-coded, female	M12, A-coded, female	M12, A-coded, female
	via 7/8" connector	via 7/8" connector	via 7/8" connector	via 7/8" connector
	via 7/8" connector	via 7/8" connector	via 7/8" connector	via 7/8" connector
	8	8	8	8
	8	16	8	16
	No	No	No	No
	No	No	Yes	Yes
	2	2	2	2
	4	8	4	8
	No	No	Yes	Yes
	2 A	2 A	2 A	2 A
	Yellow/red LED	Yellow/red LED	Yellow/red LED	Yellow/red LED
	9 A	9 A	9 A	9 A
	9 A	9 A	9 A	9 A
	IP 67 (when connected)	IP 67 (when connected)	IP 67 (when connected)	IP 67 (when connected)
	–5...+70 °C	–5...+70 °C	–5...+70 °C	–5...+70 °C
	–25...+70 °C	–25...+70 °C	–25...+70 °C	–25...+70 °C
	2 mounting holes	2 mounting holes	2 mounting holes	2 mounting holes
	181×68×36.9 mm	181×68×36.9 mm	181×68×36.9 mm	181×68×36.9 mm
	Nickel-plated Gd-Zn	Nickel-plated Gd-Zn	Nickel-plated Gd-Zn	Nickel-plated Gd-Zn

	2.5 ms	5 ms	15 ms	20 ms
	1 output byte	2 output byte	3 input bytes/1 output byte	5 input bytes/2 output bytes
	Green LED, pulsing	Green LED, pulsing	Green LED, pulsing	Green LED, pulsing
	Red LED	Red LED	Red LED	Red LED

All hubs include four screw plugs and label set.

Easy installation with IO-Link under IP-20 conditions
The maximum number of 16 channels of the IP -20 IO-Link sensor/ actuator hub are user configurable (input/output) and meet the requirements for inexpensive flexible wiring.
The IO-Link is connected with a 4-pin standard sensor cable. The connection from/to the peripherals is by means of removable screw terminal blocks.

IO-Link up to the control panel!
The compact size enables the simple and straightforward installation in control cabinets, control boxes and control panel housings.
Simply snap the plastic housing onto a mounting rail according to EN 60175 – done.

IO-Link for integration in devices and device modules.
Circuit board variants are available for the integration in spatially limited and complex functional units which can be integrated via spacing bolts.

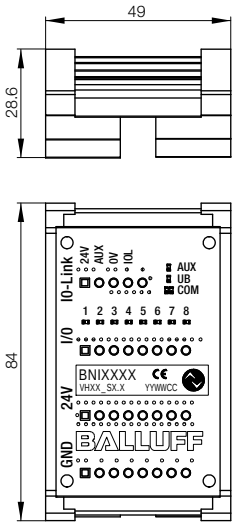

BNI IOL-309-000-K024

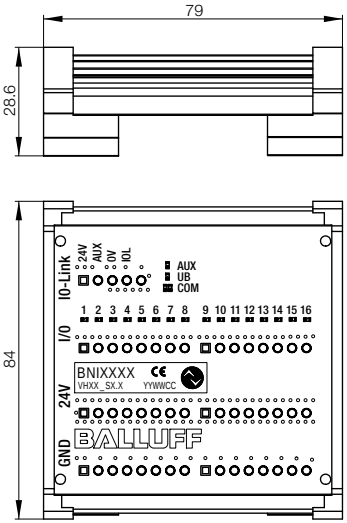

BNI IOL-310-000-K025

IO-Link
Sensor/actuator hubs, IP 20

IO-Link	Device	Device
Type	8× DI/DO	16× DI/DO
Ordering code	**BNI004K**	**BNI004L**
Part designation	BNI IOL-309-000-K024	BNI IOL-310-000-K025
Operating voltage U_B	18…30 V DC	18…30 V DC
Function indicator IO-Link RUN	Green LED	Green LED
Power indicator	Green LED	Green LED
Connection: IO-Link	Spring-loaded terminal, pluggable	Spring-loaded terminal, pluggable
Connection U_O	Spring-loaded terminal, pluggable	Spring-loaded terminal, pluggable
Connection U_A	Spring-loaded terminal, pluggable	Spring-loaded terminal, pluggable
Connection: I/O ports	Spring-loaded terminal, pluggable	Spring-loaded terminal, pluggable
No. of I/O ports	8	16
Number of inputs	Max. 8	Max. 16
Number of outputs	Max. 8	Max. 16
configurable/parameterizable	Yes	Yes
Single-channel monitoring	No	No
Max. load current sensors/channel	100 mA	100 mA
Max. load current actuators/channel	400 mA	400 mA
Port status indicator	Yellow LED	Yellow LED
Total current U_B	< 1.4 A	< 1.4 A
Total current U_A	< 1.4 A	< 1.4 A
Degree of protection per IEC 60529	IP 20	IP 20
Operating temperature T_a	–5…+50 °C	–5…+50 °C
Storage temperature range	–25…+75 °C	–25…+75 °C
Mounting	Top-hat rail fitting over plastic shell	Top-hat rail fitting over plastic shell
Dimensions (L×W×H)	49×84×43 mm (L×W×H)	79×84×43 mm (L×W×H)

IO-Link

No. of IO-Link ports		1× device	1× device
Max. cycle time			12 ms
IO-Link process data length		1 Byte Input/1 Byte Output	2 Bytes Input/2 Bytes Output
Indicators	Communication	Green LED, pulsing	Green LED, pulsing
	Error	Red LED	Red LED

Converting analog signals into IO-Link signals and saving costs in the process
The number of analog data/information/signals generally do not represent 10% of the existing signal formation in most systems and machines.

The connection and integration of analog input/output signals is associated with high costs due to the use of shielded cables on the installation side and expensive multi-channel input modules on the control side.

The solution
The IO-Link Analog Plugs from Balluff open up a considerable cost reduction potential for systems with limited analog value formation.
Expensive shielded cables are replaced with simple unshielded three-core cables. The signal neutrality of the IO-Link ports of the IO-Link master modules together with the IO-Link analog plugs ensures maximum signal variance. "Mixing" different input/output/current and voltage signals in one module is therefore possible.

Your benefits
– compact housing
– 14 bits high resolution
– Extended temperature range
– Inputs and outputs

IO-Link	Device	Device	
Type	1 AI, 0...10 V DC	1 AI, 4...20 mA	
Ordering code	**BNI0042**	**BNI0041**	
Part number	BNI IOL-714-000-K023	BNI IOL-712-000-K023	
Operating voltage U_B	18…30 V DC	18…30 V DC	
Connection: IO-Link	M12, A-coded, male	M12, A-coded, male	
Analog interface connection	M12, A-coded, female	M12, A-coded, female	
Analog ports			
Number of analog ports	1	1	
Interface	0...10 V DC Input	4...20 mA Input	
Resolution	14 Bit	14 Bit	
Max. load current sensors/channel	1 A	1 A	
Max. load current actuators/channel	1.4 A	1.4 A	
Degree of protection per IEC 60529	IP 67 (when connected)	IP 67 (when connected)	
Operating temperature T_a	–5…+70 °C	–5…+70 °C	
Storage temperature range	–25…+70 °C	–25…+70 °C	
Weight	21 g	21 g	
Dimensions (L×W×H)	40×12×50 mm	40×12×50 mm	
Housing material	Plastic	Plastic	

IO-Link

Max. cycle time		3 ms	3 ms	
IO-Link process data length		2 Bytes Input	2 Bytes Input	
Indicators	Communication	Green LED, pulsing	Green LED, pulsing	
	Module OK	Green LED	Green LED	

IO-Link
Analog adapter

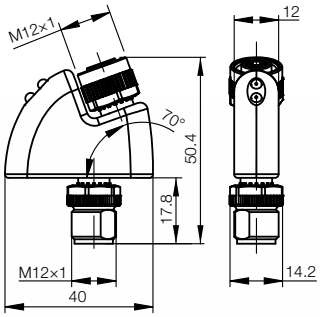

Device	Device	Device
1 AI, PT100	1 AO, 0...10 V DC	1 AO, 4...20 mA
	BNI004C	**BNI004E**
BNI IOL-716-000-K023	BNI IOL-722-000-K023	BNI IOL-724-000-K023
18…30 V DC	18…30 V DC	18…30 V DC
M12, A-coded, male	M12, A-coded, male	M12, A-coded, male
M12, A-coded, female	M12, A-coded, female	M12, A-coded, female
1	1	1
PT 100 Input	0...10 V DC Output	4...20 mA Output
14 Bit	14 Bit	14 Bit
1 A	1 A	1 A
1.4 A	1.4 A	1.4 A
IP 67 (when connected)	IP 67 (when connected)	IP 67 (when connected)
–5…+70 °C	–5…+70 °C	–5…+70 °C
–25…+70 °C	–25…+70 °C	–25…+70 °C
21 g	21 g	21 g
40×12×50 mm	40×12×50 mm	40×12×50 mm
Plastic	Plastic	Plastic

3 ms	3 ms	3 ms
2 Bytes Input	2 Bytes Output	2 Bytes Output
Green LED, pulsing	Green LED, pulsing	Green LED, pulsing
Green LED	Green LED	Green LED

more added value

- Clearly visible status LEDs
- Addressable display
- Powerful and safe outputs
- Innovative housing design

CC-Link

CC-Link is the principle fieldbus technology used in Asia. The open network is supported by the global CC-Link partner association CLPA, which comprises more than 1000 companies. CC-Link is a standardized fieldbus designed to integrate different automation components from a wide range of providers. CC-Link is an effective integral system that will fulfill 100 % of your application requirements. Utilize the extensive, high-quality CC-Link portfolio from Balluff to implement your own powerful control topologies using products from a single source.

CC-Link with IO-Link functionality
A module with four IO-Link ports is now available to supplement the CC-Link fieldbus module product series.

The CC-Link module with IO-Link includes four IO-Link master ports that can be configured and used fully independently of one another. You get four additional, freely configurable standard I/O ports that provide a further eight inputs/outputs for standard sensors and actuators.

	IO-Link	NPN
Fieldbus	CC-Link	CC-Link
Type	4× IO-Link, 12 DI/DO PNP	16 DI NPN
Ordering code	**BNI0040**	**BNI0049**
Part number	BNI CCL-502-100-Z001	BNI CCL-106-100-Z001
Operating voltage U_B	18...30 V DC	18...30 V DC
Function indicator	Green LED	Green LED
Fault function indicator	Red LED	Red LED
Power indicator	Green LED	Module/actuator/sensor supply
Connection: Fieldbus	M12, 5-pin, female and male	M12, 5-pin, female and male
Connection: Operating voltage	7/8", 5-pin, female and male	7/8", 5-pin, female and male
Connection: I/O ports	M12, A-coded, female	M12, A-coded, female
No. of I/O ports	8	8
Number of inputs	max. 12 PNP	16 NPN
Number of outputs	max. 12 PNP	
Configurable inputs/outputs	Yes	No
Max. load current sensors/channel	200 mA	200 mA
Max. output load current	1.6 A/2 A	
Port status indicator (signal status)	Yellow LED	Yellow LED
Port diagnostic indicator (overload)	Red LED	Red LED
Total current $U_{Actuator}$	≤ 9 A	≤ 9 A
Total current U_{Sensor}	≤ 9 A	≤ 9 A
Degree of protection per IEC 60529	IP 67 (when connected)	IP 67 (when connected)
Operating temperature T_a	–5...+70 °C	–5...+55 °C
Storage temperature range	–25...+70 °C	–25...+75 °C
Weight	Approx. 577 g	Approx. 577 g
Mounting	2 mounting holes	2 mounting holes
Dimensions (L×W×H)	224×68×36.9 mm	224×68×36.9 mm
Housing material	Nickel-plated Gd-Zn	Nickel-plated Gd-Zn

IO-Link

No. of IO-Link master ports		4× master
Operating modes (3-wire)		SIO, COM 1, COM 2, COM 3
Indicators	Communication	Green LED
	Error	Red LED
Max. load current for IO-Link device		1.6 A

CC-Link

Powerful products from a single source

PNP				
	CC-Link	CC-Link	CC-Link	CC-Link
	16 DI PNP	16 DI/DO PNP	8 DI + 8 DO PNP	8 DO
	BNI002F	**BNI002A**	**BNI002C**	**BNI002E**
	BNI CCL-104-100-Z001	BNI CCL-302-100-Z001	BNI CCL-305-100-Z001	BNI CCL-202-100-Z001
	18...30 V DC	18...30 V DC	18...30 V DC	18...30 V DC
	Green LED	Green LED	Green LED	Green LED
	Red LED	Red LED	Red LED	Red LED
	Module/actuator/sensor supply	Module/actuator/sensor supply	Module/actuator/sensor supply	Module/actuator/sensor supply
	M12, 5-pin, female and male	M12, 5-pin, female and male	M12, 5-pin, female and male	M12, 5-pin, female and male
	7/8", 5-pin, female and male	7/8", 5-pin, female and male	7/8", 5-pin, female and male	7/8", 5-pin, female and male
	M12, A-coded, female	M12, A-coded, female	M12, A-coded, female	M12, A-coded, female
	8	8	8	8
	16 PNP	max. 16 PNP	8 PNP	
		max. 16 PNP	8 PNP	8 PNP
	No	Yes	No	No
	200 mA	200 mA	200 mA	200 mA
		2 A	2 A	2 A
	Yellow LED	Yellow LED	Yellow LED	Yellow LED
	Red LED	Red LED	Red LED	Red LED
	≤ 9 A	≤ 9 A	≤ 9 A	≤ 9 A
	≤ 9 A	≤ 9 A	≤ 9 A	≤ 9 A
	IP 67 (when connected)	IP 67 (when connected)	IP 67 (when connected)	IP 67 (when connected)
	–5...+55 °C	–5...+55 °C	–5...+55 °C	–5...+55 °C
	–25...+75 °C	–25...+75 °C	–25...+75 °C	–25...+75 °C
	Approx. 577 g	Approx. 577 g	Approx. 577 g	Approx. 577 g
	2 mounting holes	2 mounting holes	2 mounting holes	2 mounting holes
	224×68×36.9 mm	224×68×36.9 mm	224×68×36.9 mm	224×68×36.9 mm
	Nickel-plated Gd-Zn	Nickel-plated Gd-Zn	Nickel-plated Gd-Zn	Nickel-plated Gd-Zn

more added value

Ethernet/IP with IO-Link functionality
IO-Link now not only communicates with Profibus, Profinet and CC-Link. At Balluff, IO-Link now communicates with Ethernet/IP so that all the benefits of IO-Link are available right down to the second lowest level.

IO-Link not only ensures freedom of installation, but also guarantees simplified wiring, integrated diagnostics and central configuration. System failures can be reliably prevented and systems started up again quickly if the worst comes to the worst.

Ethernet/IP with IO-Link guarantees efficient operation, saves time, reduces costs and incorporates intelligent connection technology to improve process quality.

The Ethernet/IP module with IO-Link includes four IO-Link master ports that can be configured and used fully independently of one another. You get four additional, freely configurable standard I/O ports that provide a further eight inputs/outputs for standard sensors and actuators.

IO-Link

Fieldbus	Ethernet/IP
Type	4× IO-Link, 12 DI/DO PNP
Ordering code	**BNI004A**
Part number	BNI EIP-502-105-Z015
Operating voltage U_B	18...30 V DC
Module current consumption	120 mA...130 mA
AUX input/output power status UA LED	US/no
Module status indicator: Mod LED	Yes
Network status indicator: Net LED	Yes
Port status indicator	Black, red, yellow
Connection: Fieldbus	M12, D-coded, female
Connection AUX power	7/8", male, 4-pin
Connection: I/O ports	M12, A-coded, female
No. of I/O ports	8
Number of inputs	max. 12 PNP
Number of outputs	max. 12 PNP
Configurable inputs/outputs	Yes
Max. load current sensors/channel	200 mA
Max. output load current	1.6 A/2 A
Port status indicator (signal status)	Yellow LED
Port diagnostic indicator (overload)	Red LED
Total current $U_{Actuator}$	≤ 9 A
Total current U_{Sensor}	≤ 9 A
Degree of protection per IEC 60529	IP 67 (when connected)
Operating temperature T_a	–5...+70 °C
Storage temperature range	–25...+70 °C
Mounting	2 mounting holes
Dimensions (L×W×H)	225×68×36.9 mm
Housing material	Nickel-plated Gd-Zn

IO-Link

No. of IO-Link master ports		4× master
Operating modes (3-wire)		SIO, COM 1, COM 2, COM 3
Indicators	Communication	Green LED
	Error	Red LED
Max. load current for IO-Link device		1.6 A

Ethernet
Innovations from Balluff

	Ethernet/IP	Ethernet/IP	Ethernet/IP
	16 DI/DO PNP configurable	16 DI PNP	8 DI/DO PNP configurable
	BNI004F	**BNI004M**	**BNI0044**
	BNI EIP-302-105-Z015	BNI EIP-104-105-Z015	BNI EIP-307-100-Z014
	18...30 V DC	18...30 V DC	18...30 V DC
	120 mA...130 mA	120 mA...130 mA	120 mA...130 mA
	US/no	US/no	US/no
	Yes	Yes	Yes
	Yes	Yes	Yes
	Black, red, yellow	Black, red, yellow	Black, red, yellow
	M12, D-coded, female	M12, D-coded, female	M12, D-coded, female
	7/8", male, 4-pin	7/8", male, 4-pin	7/8", male, 4-pin
	M12, A-coded, female	M12, A-coded, female	M12, A-coded, female
	8	8	4
	max. 16 PNP	max. 16 PNP	max. 8 PNP
	max. 16 PNP		max. 8 PNP
	Yes	Yes	Yes
	200 mA	200 mA	200 mA
	1.6 A/2 A	1.6 A/2 A	1.6 A/2 A
	Yellow LED	Yellow LED	Yellow LED
	Red LED	Red LED	Red LED
	≤ 9 A	≤ 9 A	≤ 9 A
	≤ 9 A	≤ 9 A	≤ 9 A
	IP 67 (when connected)	IP 67 (when connected)	IP 67 (when connected)
	–5...+70 °C	–5...+70 °C	–5...+70 °C
	–25...+70 °C	–25...+70 °C	–25...+70 °C
	2 mounting holes	2 mounting holes	2 mounting holes
	225×68×36.9 mm	225×68×36.9 mm	175×68×36.9 mm
	Nickel-plated Gd-Zn	Nickel-plated Gd-Zn	Nickel-plated Gd-Zn

more added value

Second generation with display, integrated switch and web server

Profinet is increasingly becoming the communications medium of the future for mechanical and plant engineering. In some areas, it has already incrementally replaced the Profibus. Profinet has for a long time been a globally recognized standard for network technology. Based on Ethernet, communication over Profinet is significantly faster, and the volume of data is significantly higher than with classic fieldbus systems and allows the connection of time-critical drive technology. Furthermore, Profinet is quick to install and integrates easily into existing networks. In addition to time savings and considerable cost savings comes the added benefit of ease of operation. This is because only Balluff provides Profinet modules with a display that allows IP addresses to be blocked, protecting the modules from accidental changes. This increases security and simplifies maintenance.

Of course, IO-Link is also a firmly entrenched component in the second generation of Profinet modules. The Profinet module with IO-Link functionality has four IO-Link master ports, which you can configure and implement completely independently of each other. You get four additional, freely configurable standard I/O ports that provide an additional eight inputs/outputs for standard sensors and actuators.

As a new feature, the second generation of Profinet provides an integrated 2-port Ethernet switch that makes it possible to install a linear topology in the system without an additional external switch.

Also new in this generation is the integrated web server.

IO-Link

Fieldbus	Profinet	
Type	4× IO-Link, 12× DI/DO	
Ordering code	**BNI004U**	
Part number	BNI PNT-502-105-Z015	
Supply voltage U_B	18...30 V DC	
Function indicator	BUS/RUN	
Indicators/input	Display/pushbutton	
Module status indicator: Mod LED	yes	
Network status indicator: Net LED	yes	
Port status indicator	Black, red, yellow	
Connection: Fieldbus	M12, D-coded, socket	
Connection: AUX power	7/8", plug, 4-pin	
Connection: I/O ports	M12, A-coded, socket	
No. of I/O ports	8	
Number of inputs	max. 12 PNP	
Number of outputs	max. 12 PNP	
Configurable inputs/outputs	yes	
Max. load current, sensors/channel	200 mA	
Max. output load current	1.6 A/2 A	
Port status indicator (signal status)	Yellow LED	
Port diagnostic indicator (overload)	Red LED	
Total current $U_{Actuator}$	≤ 9 A	
Total current U_{Sensor}	≤ 9 A	
Degree of protection as per IEC 60529	IP 67 (when screwed into place)	
Operating temperature T_a	–5...+70 °C	
Storage temperature	–25...+70 °C	
Fasteners	2 mounting holes	
Dimensions (L×W×H)	225×68×36.9 mm	
Housing material	Nickel-plated GdZn	

IO-Link

No. of IO-Link master ports		4× master
Operating modes (3-wire)		SIO, COM 1, COM 2, COM 3
Indicators	Communication	Green LED
	Error	Red LED
Max. load current for IO-Link device		1.6 A

Profinet

Profinet Gen II

	Profinet	Profinet	Profinet	Profinet
	16× DI/DO, configurable	16 DI	8 DO	8 DI/8 DO
	BNI0052	**BNI0053**	**BNI005F**	**BNI005K**
	BNI PNT-302-105-Z015	BNI PNT-104-105-Z015	BNI PNT-202-105-Z015	BNI PNT-305-105-Z015
	18...30 V DC	18...30 V DC	18...30 V DC	18...30 V DC
	BUS/RUN	BUS/RUN	BUS/RUN	BUS/RUN
	Display/pushbutton	Display/pushbutton	Display/pushbutton	Display/pushbutton
	yes	yes	yes	yes
	yes	yes	yes	yes
	Black, red, yellow	Black, red, yellow	Black, red, yellow	Black, red, yellow
	M12, D-coded, socket	M12, D-coded, socket	M12, D-coded, socket	M12, D-coded, socket
	7/8", plug, 4-pin	7/8", plug, 4-pin	7/8", plug, 4-pin	7/8", plug, 4-pin
	M12, A-coded, socket	M12, A-coded, socket	M12, A-coded, socket	M12, A-coded, socket
	8	8	8	8
	max. 16 PNP	16 PNP	8 PNP	8 PNP
	max. 16 PNP			8 PNP
	yes	no	no	no
	200 mA	200 mA	200 mA	200 mA
	2 A		2 A	2 A
	Yellow LED	Yellow LED	Yellow LED	Yellow LED
	Red LED	Red LED	Red LED	Red LED
	≤ 9 A		≤ 9 A	≤ 9 A
	≤ 9 A	≤ 9 A		≤ 9 A
	IP 67 (when screwed into place)	IP 67 (when screwed into place)	IP 67 (when screwed into place)	IP 67 (when screwed into place)
	–5...+70 °C	–5...+70 °C	–5...+70 °C	–5...+70 °C
	–25...+70 °C	–25...+70 °C	–25...+70 °C	–25...+70 °C
	2 mounting holes	2 mounting holes	2 mounting holes	2 mounting holes
	225×68×36.9 mm	225×68×36.9 mm	175×68×36.9 mm	300×68×36.9 mm
	Nickel-plated GdZn	Nickel-plated GdZn	Nickel-plated GdZn	Nickel-plated GdZn

more added value

Second generation with display
In use for years, Profibus stands for well-engineered fieldbus technology and reliably supports modern manufacturing.

As a full-service provider, Balluff offers a wide range of components for optimum Profibus use. Regardless of controller manufacturer, Balluff has the perfect solution in store for you: for efficient field and process communication with simple wiring and fast integration through direct installation in your system and the possibility of fast modifications. Even in harsh environments.

Balluff Profibus solutions are IO-Link capable, allowing you to take advantage of tangible IO-Link advantages here as well. Wiring is made even simpler. From start to finish, diagnostics prevent system shutoff, and through central configuration, systems are quickly returned to operation. You save time and benefit from real cost advantages.

Now, Balluff is sending the second generation of the Profibus module into operation, and it delivers even more advantages to the user.

In addition to time savings and considerable cost savings, it provides even greater ease of operation. Because only Balluff now also provides the Profibus module with displays with which you can set station numbers or call up module information like the hardware and software status. This increases security and simplifies maintenance.

Of course, IO-Link is also a firmly entrenched component in the second generation of Profibus modules. The Profibus – module with IO-Link functionality has four IO-Link master ports, which can be configured and implemented completely independently of each other. You get four additional, freely configurable standard I/O ports that provide an additional eight inputs/outputs for standard sensors and actuators.

IO-Link

Fieldbus	Profibus	
Type	4× IO-Link, 12× DI/DO	
Ordering code	**BNI005R**	
Part number	BNI PBS-502-101-Z001	
Supply voltage U_B	18...30 V DC	
Indicators/input	BUS/RUN	
Function indicator	Display/pushbutton	
Module status indicator: Mod LED	yes	
Network status indicator: Net LED	yes	
Port status indicator	Black, red, yellow	
Connection: Fieldbus	M12, D-coded, socket	
Connection: AUX power	7/8", plug, 4-pin	
Connection: I/O ports	M12, A-coded, socket	
No. of I/O ports	8	
Number of inputs	max. 12 PNP	
Number of outputs	max. 12 PNP	
Configurable inputs/outputs	yes	
Max. load current, sensors/channel	200 mA	
Max. output load current	1.6 A/2 A	
Port status indicator (signal status)	Yellow LED	
Port diagnostic indicator (overload)	Red LED	
Total current $U_{Actuator}$	≤ 9 A	
Total current U_{Sensor}	≤ 9 A	
Degree of protection as per IEC 60529	IP 67 (when screwed into place)	
Operating temperature T_a	–5...+70 °C	
Storage temperature	–25...+70 °C	
Fasteners	2 mounting holes	
Dimensions (L×W×H)	225×68×36.9 mm	
Housing material	Nickel-plated GdZn	

IO-Link

No. of IO-Link master ports		4× master
Operating modes (3-wire)		SIO, COM 1, COM 2, COM 3
Indicators	Communication	Green LED
	Error	Red LED
Max. load current for IO-Link device		1.6 A

Profibus

Profibus Gen II

	Profibus	Profibus	Profibus
	16× DI/DO, configurable	16 DI	8 DO
	BNI0047	**BNI005C**	**BNI0057**
	BNI PBS-302-101-Z001	BNI PBS-104-101-Z001	BNI PBS-202-101-Z001
	18...30 V DC	18...30 V DC	18...30 V DC
	BUS/RUN	BUS/RUN	BUS/RUN
	Display/pushbutton	Display/pushbutton	Display/pushbutton
	yes	yes	yes
	yes	yes	yes
	Black, red, yellow	Black, red, yellow	Black, red, yellow
	M12, D-coded, socket	M12, D-coded, socket	M12, D-coded, socket
	7/8", plug, 4-pin	7/8", plug, 4-pin	7/8", plug, 4-pin
	M12, A-coded, socket	M12, A-coded, socket	M12, A-coded, socket
	8	8	8
	max. 16 PNP	16 PNP	8 PNP
	max. 16 PNP		
	yes	no	no
	200 mA	200 mA	200 mA
	2 A		2 A
	Yellow LED	Yellow LED	Yellow LED
	Red LED	Red LED	Red LED
	≤ 9 A		≤ 9 A
	≤ 9 A	≤ 9 A	
	IP 67 (when screwed into place)	IP 67 (when screwed into place)	IP 67 (when screwed into place)
	–5...+70 °C	–5...+70 °C	–5...+70 °C
	–25...+70 °C	–25...+70 °C	–25...+70 °C
	2 mounting holes	2 mounting holes	2 mounting holes
	225×68×36.9 mm	225×68×36.9 mm	175×68×36.9 mm
	Nickel-plated GdZn	Nickel-plated GdZn	Nickel-plated GdZn

New

Modules with display
Innovations from Balluff

The active distributors for the CC-Link and Ethernet/IP fieldbus systems are the first modules on the market with a display for indicating and entering:
- Node addresses
- Data transmission rates
- Module information (software, firmware, etc.)

Individual menu items are entered and selected using two buttons. The menu navigation is simple and self-explanatory. The actual display is bright and has a high resolution.

The display is an integral component of the module and can be locked via the PLC. Unauthorized access is then no longer possible. Two LEDs controlled by the PLC allow you to visualize results that are not specific to the module or port at the location where they occur.

A further benefit:
Relevant information appears on the display, which facilitates diagnostics and thus increases system availability.

more added value

Web Server

Ethernet/IP Gen IV and Profinet Gen II

- A simple browser provides access to the integrated webserver, which has been implemented in all Ethernet/IP modules of Gen IV.

- Comprehensive diagnostic functions are available here, such as the presentation of all LED displays on the module including plain text presentations of the current displays.

- The "Device Properties" area allows you e.g. to parameterize connected devices at the IO-Link port.

- The "Configurations" function contains the module setting, such as the assignment of the IP address.

more added value

Ethernet TCP/IP 5-port switch
Ethernet-based network systems are gaining more and more importance in industrial automation. Balluff now provides a wide variety of Ethernet-based systems and network components such as Profinet or Ethernet/IP for machine and plant equipment.

In order to offer a complete system here as well, Balluff has now expanded its own Ethernet product line to the 5-port Ethernet TCP/IP switch in order to link the Ethernet system components easily via Ethernet.

With the TCP/IP switch, it is now possible to connect up to 5 Ethernet devices to one component radially. The RJ45 ports and the 10 and 100 Mbps transmission rates support this. The transfer speed is set automatically with the Auto negotiation function. Wiring errors are reliably ruled out by the auto crossing function. The module identifies on its own which cable type is being used.

Communication	Ethernet
Type	TCP/IP switch
Ordering code	**BNI005E**
Part number	BNI TCP-951-000-E028
Ports	5×RJ45 Spring force clamp
System power supply	0.2...2.5 mm²
Supply voltage U_B	12...48 V DC
Transmission rate	10/100 Mbps full duplex Auto crossing
Operating modes	Auto negotiation
Diagnostic displays	
Communication status	Link/run LED, (yellow/green)
Supply voltage	LED (green), power
Form of protection	IP 20
Housing	Black plastic
Temperature range	–10...+60 °C (storage temperature 25...+70 °C)
Mounting type	Snaps onto support rail TH35 (EN60715)
Weight	152 g

New

Ethernet TCP/IP switch

more added value

- High visibility of LEDs
- Flexible mounting options
- High shock and vibration ratings

Passive splitter boxes by Balluff

Balluff BPI Passive Interfaces for connecting sensors and actuators with the controller are particularly well suited to adverse conditions and recommended where coolants and lubricants are used. A fully enclosed housing provides a higher enclosure rating as well as better shock and vibration resistance characteristics. Due to an outstanding design, Balluff BPI Passive Interfaces can be integrated in all systems and machines. The BPI can be flexibly mounted on all standard profiles and base plates and the mounting bore holes are centrally positioned.
Flexible mounting is supported by highly visible LEDs.
Setting up and adjusting your machines and systems is much easier as a result.

Type	4-way, cap with cable	8-way, cap with cable
Rated power supply U_e	24 V DC	24 V DC
Operating voltage U_B	10...30 V DC	10...30 V DC
Function indicator		
Power indicator		
Sensor connection		
Controller connection	Cap connection with cable	Cap connection with cable
Number of connections		
Current load capacity	2 A	2 A
Total current	6 A	6 A
Housing material	PBT, GF	PBT, GF
Degree of protection per IEC 60529		
Ambient temperature T_a	–25...+80 °C	–25...+80 °C
Version	for base	for base
Recommended connector-port		

Cable material	Color	Length	Ordering code Part number	
PUR	Black	3 m	BPI T009-K-00-KPX70-030	BPI T00E-K-00-KPXB0-030
PUR	Black	5 m	BPI T009-K-00-KPX70-050	BPI T00E-K-00-KPXB0-050
PUR	Black	10 m	BPI T009-K-00-KPX70-100	BPI T00E-K-00-KPXB0-100
PUR	Black	15 m	BPI T009-K-00-KPX70-150	BPI T00E-K-00-KPXB0-150

Industrial Networking and Connectivity

Passive splitter box BPI, 4-pin

	4-way, base with LEDs	**8-way, base with LEDs**	**4-way, M12 with LEDs**	**8-way, M12 with LEDs**
	24 V DC	24 V DC	24 V DC	24 V DC
	10...30 V DC	10...30 V DC	10...30 V DC	10...30 V DC
	Yes	Yes	Yes	Yes
	Green LED	Green LED	Green LED	Green LED
	4-pin female, M12×1	4-pin female, M12×1	4-pin female, M12×1	4-pin female, M12×1
	Cap connection with/without cable	Cap connection with/without cable	Cap connection without cable	Cap connection without cable
	4	4	4	4
	2 A	2 A	2 A	2 A
	6 A	6 A	6 A	6 A
	PBT, GF, fully enclosed	PBT, GF, fully enclosed	PBT, GF, fully enclosed	PBT, GF, fully enclosed
	IP 67 (when connected)	IP 67 (when connected)	IP 67 (when connected)	IP 67 (when connected)
	–25...+80 °C	–25...+80 °C	–25...+80 °C	–25...+80 °C
	PNP normally open (NO)⎍	PNP normally open (NO)⎍	PNP normally open (NO)⎍	PNP normally open (NO)⎍
	BCC M414...	BCC M414...	BCC M414...	BCC M414...
	BPI007A	**BPI007E**	**BPI007L**	**BPI007J**
	BPI 4M4A4P-2K-00-TP09	BPI 8M4A4P-2K-00-TP0E	BPI 4M4A4P-2K-00-TPS9	BPI 8M4A4P-2K-00-TPSE

Ideal areas of application for passive splitter boxes by Balluff include local installations in assembly and handling machines, packaging technology, special machine construction, etc.

Balluff Passive Interface BPI – A multi-talent, even under demanding conditions

- Outstanding design
- Fully enclosed housing
- High shock and vibration ratings
- Flexible mounting options
- High visibility of LEDs
- Large terminal compartment
- Modular design
- Quick to mount/detach for transportation

Type	**4-way, cap with cable**	**8-way, cap with cable**
Rated power supply U_e	24 V DC	24 V DC
Operating voltage U_B	10...30 V DC	10...30 V DC
Function indicator		
Power indicator		
Sensor connection		
Controller connection	Cap connection with cable	Cap connection with cable
Number of connections		
Current load capacity	2 A	2 A
Total current	6 A	6 A
Housing material	PBT, GF	PBT, GF
Degree of protection per IEC 60529		
Ambient temperature T_a	–25...+80 °C	–25...+80 °C
Version	for base	for base
Recommended connector-port		

Cable material	**Color**	**Length**	**Ordering code** Part number	
PUR	Black	3 m	BPI T00G-K-00-KPXB0-030	BPI T00N-K-00-KPXL0-030
PUR	Black	5 m	BPI T00G-K-00-KPXB0-050	BPI T00N-K-00-KPXL0-050
PUR	Black	10 m	BPI T00G-K-00-KPXB0-100	BPI T00N-K-00-KPXL0-100
PUR	Black	15 m	BPI T00G-K-00-KPXB0-150	BPI T00N-K-00-KPXL0-150

Industrial Networking and Connectivity

Passive splitter box BPI, 5-pin

	4-way, base with LEDs	**8-way, base with LEDs**	**4-way, M12 with LEDs**	**8-way, M12 with LEDs**
	24 V DC	24 V DC	24 V DC	24 V DC
	10...30 V DC	10...30 V DC	10...30 V DC	10...30 V DC
	Yes	Yes	Yes	Yes
	Green LED	Green LED	Green LED	Green LED
	5-pin female, M12×1	5-pin female, M12×1	5-pin female, M12×1	5-pin female, M12×1
	Cap connection with/without cable	Cap connection with/without cable	Cap connection without cable	Cap connection without cable
	4	4	4	4
	2 A	2 A	2 A	2 A
	6 A	6 A	6 A	6 A
	PBT, GF, fully enclosed	PBT, GF, fully enclosed	PBT, GF, fully enclosed	PBT, GF, fully enclosed
	IP 67 (when connected)	IP 67 (when connected)	IP 67 (when connected)	IP 67 (when connected)
	–25...+80 °C	–25...+80 °C	–25...+80 °C	–25...+80 °C
	PNP normally open/ normally closed (NO/NC)	PNP normally open/ ormally closed (NO/NC)	PNP normally open/ normally closed (NO/NC)	PNP normally open/ normally closed (NO/NC)
	BCC M415...	BCC M415...	BCC M415...	BCC M415...
	BPI007C	**BPI007F**	**BPI007K**	**BPI007H**
	BPI 4M4A5P-2K-00-TP09	BPI 8M4A5P-2K-00-TP0N	BPI 4M4A5P-2K-00-TPSG	BPI 8M4A5P-2K-00-TPSN

more added value

New BCC connectors up to 120 °C
The durable BCC connectors with IP 68 protection are ideally matched to the wiring and suitable for rapid connection of sensors/actuators in the industrial automation sector. New products include versions for high-temperature applications up to 120 °C, for example, for the connection of high pressure-resistant sensors in hydraulic applications.

- Temperature range –25…+120 °C
- Degree of protection IP 68
- Flame-resistant
- Straight and angular
- 3-pin, 4-pin
- Easy to find notches on the handle body

120 °C

High Temperature

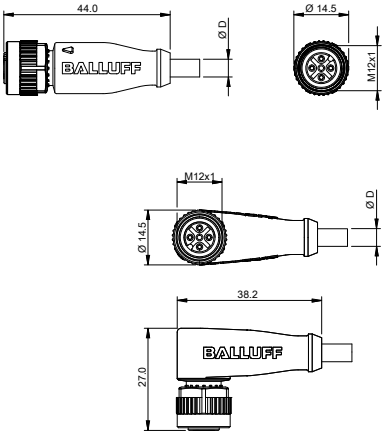

Connector diagram and wiring	
Max. operating voltage AC U_O	
Max. operating voltage DC U_O	
Cable	
No. of wires × conductor cross-section	
Degree of protection as per IEC 60529	
Ambient temperature T_a	
Version	

Cable material	Color	Length	
PUR	Black	2 m	
PUR	Black	3 m	
PUR	Black	5 m	
PUR	Black	10 m	

Other cable materials, colors and lengths on request. Connectors without LED are suitable for PNP and NPN switching functions. NPN versions with LED on request.

Industrial Networking and Connectivity

BCC connectors for temperatures up to 120 °C

	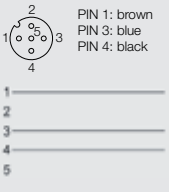 PIN 1: brown PIN 3: blue PIN 4: black	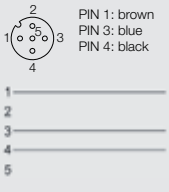 PIN 1: brown PIN 3: blue PIN 4: black	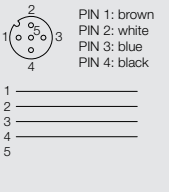 PIN 1: brown PIN 2: white PIN 3: blue PIN 4: black	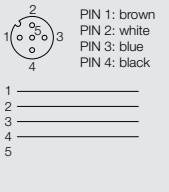 PIN 1: brown PIN 2: white PIN 3: blue PIN 4: black
	250 V AC	250 V AC	250 V AC	250 V AC
	250 V DC	250 V DC	250 V DC	250 V DC
	Molded	Molded	Molded	Molded
	3×0.34 mm²	3×0.34 mm²	4×0.34 mm²	4×0.34 mm²
	IP 68	IP 68	IP 68	IP 68
	–25...+120 °C	**–25...+120 °C**	**–25...+120 °C**	**–25...+120 °C**
	Normally open (NO)	Normally open (NO)	Antivalent (NO/NC)	Antivalent (NO/NC)

	Ordering code			
	Part number			
	BCC082W	**BCC0832**	**BCC0AA9**	**BCC0AAE**
	BCC M415-0000-1A-001-PH0334-020	BCC M425-0000-1A-001-PH0334-020	BCC M415-0000-1A-003-PH0434-020	BCC M425-0000-1A-003-PH0434-020
	BCC084N	**BCC0852**		
	BCC M415-0000-1A-001-PH0334-030	BCC M425-0000-1A-001-PH0334-030		
	BCC082Y	**BCC0833**	**BCC0AAA**	**BCC0AAF**
	BCC M415-0000-1A-001-PH0334-050	BCC M425-0000-1A-001-PH0334-050	BCC M415-0000-1A-003-PH0434-050	BCC M425-0000-1A-003-PH0434-050
	BCC082Z	**BCC0AA8**	**BCC0AAC**	**BCC0AAH**
	BCC M415-0000-1A-001-PH0334-100	BCC M425-0000-1A-001-PH0334-100	BCC M415-0000-1A-003-PH0434-100	BCC M425-0000-1A-003-PH0434-100

more added value

New PUR lines
Standard PUR lines have numerous advantages. They are resilient, wear-resistant, impact-resistant and resistant against solvents. Balluff now also has weld spatter-resistant versions according to ISO 14001 in its product range. This permits the replacement of irradiation-crosslinked lines, which require costly disposal as hazardous waste at the end of their service life. Possible field of applications include automobile manufacturing, in particular, bodyshell work.

- Resistant to sparks and weld spatter
- Degree of protection IP 68
- Conforms with ISO 14001 – not hazardous waste
- Replacement for irradiation-crosslinked lines
- Jacket color: Black
- Torsional stress 180 °C
- Meets all requirements in the automobile industry

Industrial Networking and Connectivity

Weld spatter-resistant PUR lines

Connector diagram and wiring	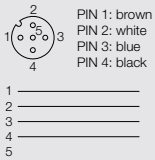	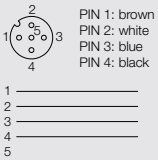
Max. operating voltage AC U_O	250 V AC	250 V AC
Max. operating voltage DC U_O	250 V DC	250 V DC
Cable	Molded	Molded
No. of wires × conductor cross-section	4×0.34 mm²	4×0.34 mm²
Degree of protection as per IEC 60529	IP 68	IP 68
Ambient temperature T_a	–25...+80 °C	–25...+80 °C
Version	Antivalent (NO/NC)	Antivalent (NO/NC)

Cable material	Color	Length	Ordering code Part number	
PUR	Black	2 m	**BCC0AK4** BCC M415-0000-1A-003-PW0434-020	
PUR	Black	5 m	**BCC0AK5** BCC M415-0000-1A-003-PW0434-050	**BCC0AKE** BCC M425-0000-1A-003-PW0434-050
PUR	Black	10 m	**BCC0AK6** BCC M415-0000-1A-003-PW0434-100	**BCC0AKF** BCC M425-0000-1A-003-PW0434-100

Other cable lengths on request. Connectors without LED are suitable for PNP and NPN switching functions. NPN versions with LED on request.

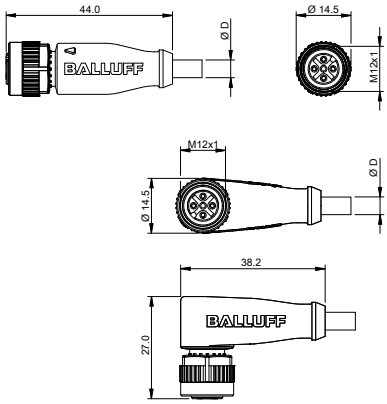

more added value

Connector diagram and wiring	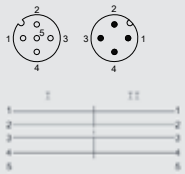	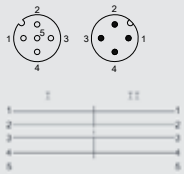	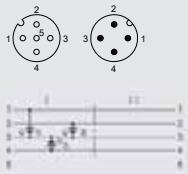 [1] Green LED = Power [2] Yellow LED = Switching output [3] White LED = Switching output
Max. operating voltage AC U_O	250 V AC	250 V AC	
Max. operating voltage DC U_O	250 V DC	250 V DC	30 V DC
Cable	Molded	Molded	Molded
No. of wires × conductor cross-section	4×0.34 mm²	4×0.34 mm²	4×0.34 mm²
Degree of protection per IEC 60529	IP 68	IP 68	IP 68
Ambient temperature T_a	–25...+80 °C	–25...+80 °C	–25...+80 °C
Version	Antivalent (NO/NC) ⎍ / ⎍	Antivalent (NO/NC) ⎍ / ⎍	Antivalent (NO/NC) ⎍ / ⎍
LED, head translucent			green/yellow/white

Cable material	Color	Length	Ordering code Part number		
PUR	Black	0.3 m	**BCC0AP1** BCC M415-M414-3A-304-PW0434-003	**BCC0ANP** BCC M425-M414-3A-304-PW0434-003	**BCC0ANE** BCC M425-M414-3A-650-PW0434-003
PUR	Black	0.6 m	**BCC0AP2** BCC M415-M414-3A-304-PW0434-006	**BCC0ANR** BCC M425-M414-3A-304-PW0434-006	**BCC0ANF** BCC M425-M414-3A-650-PW0434-006
PUR	Black	1 m	**BCC0AP3** BCC M415-M414-3A-304-PW0434-010	**BCC0ANT** BCC M425-M414-3A-304-PW0434-010	**BCC0ANH** BCC M425-M414-3A-650-PW0434-010
PUR	Black	1.5 m	**BCC0AP4** BCC M415-M414-3A-304-PW0434-015	**BCC0ANU** BCC M425-M414-3A-304-PW0434-015	**BCC0ANJ** BCC M425-M414-3A-650-PW0434-015
PUR	Black	2 m	**BCC0AP5** BCC M415-M414-3A-304-PW0434-020	**BCC0ANW** BCC M425-M414-3A-304-PW0434-020	**BCC0ANK** BCC M425-M414-3A-650-PW0434-020
PUR	Black	3 m			
PUR	Black	5 m	**BCC0AP7** BCC M415-M414-3A-304-PW0434-050	**BCC0ANZ** BCC M425-M414-3A-304-PW0434-050	**BCC0ANM** BCC M425-M414-3A-650-PW0434-050

Other cable lengths on request.
Connectors without LED are suitable for PNP and NPN switching functions.
NPN versions with LED available upon request.

	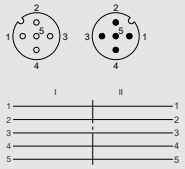	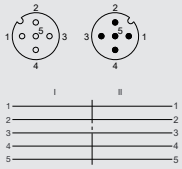	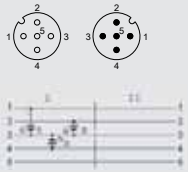 [1] Green LED = Power [2] Yellow LED = Switching output [3] White LED = Switching output
	125 V AC	125 V AC	
	125 V DC	125 V DC	30 V DC
	Molded	Molded	Molded
	5×0.34 mm²	5×0.25 mm²	5×0.34 mm²
	IP 68	IP 68	IP 68
	–25...+80 °C	–25...+80 °C	–25...+80 °C
	Antivalent	Antivalent	Antivalent
	(NO/NC)	(NO/NC)	(NO/NC)
			green/yellow/white

	Ordering code			
	Part number			
	BCC0AJJ	**BCC0AKH**	**BCC0C0N**	
	BCC M415-M415-3A-313-PW0534-006	BCC M425-M415-3A-313-PW0534-006	BCC M425-M415-3A-661-PW0534-006	
	BCC0AK7	**BCC0AKJ**	**BCC0C0P**	
	BCC M415-M415-3A-313-PW0534-010	BCC M425-M415-3A-313-PW0534-010	BCC M425-M415-3A-661-PW0534-010	
	BCC0C0M		**BCC0C0R**	
	BCC M415-M415-3A-313-PW0534-015		BCC M425-M415-3A-661-PW0534-015	
	BCC0AK8	**BCC0AKK**	**BCC0C0T**	
	BCC M415-M415-3A-313-PW0534-020	BCC M425-M415-3A-313-PW0534-020	BCC M425-M415-3A-661-PW0534-020	
	BCC0AK9	**BCC0AKL**	**BCC0C0U**	
	BCC M415-M415-3A-313-PW0534-030	BCC M425-M415-3A-313-PW0534-030	BCC M425-M415-3A-661-PW0534-030	
	BCC0AKA	**BCC0AKM**	**BCC0C0W**	
	BCC M415-M415-3A-313-PW0534-050	BCC M425-M415-3A-313-PW0534-050	BCC M425-M415-3A-661-PW0534-050	

more added value

New PUR lines
Standard PUR lines have numerous advantages. They are resilient, wear-resistant, impact-resistant and resistant against solvents. Balluff now also has weld spatter-resistant versions according to ISO 14001 in its product range. This permits the replacement of irradiation-crosslinked lines, which require costly disposal as hazardous waste at the end of their service life. Possible field of applications include automobile manufacturing, in particular, bodyshell work.

- Resistant to sparks and weld spatter
- Degree of protection IP 67 and IP 68
- Conforms with ISO 14001 – not hazardous waste
- Replacement for irradiation-crosslinked lines
- Jacket color: Orange
- Torsional stress 180 °C
- Meets all requirements in the automobile industry

Connector diagram and wiring	
Max. operating voltage AC U_O	
Max. operating voltage DC U_B	
Cable	
No. of wires × conductor cross-section	
Degree of protection per IEC 60529	
Ambient temperature T_a	
Version	

Cable material	Color	Length	
PUR	orange	5 m	

Industrial Networking and Connectivity

Weld spatter-resistant PUR lines

	4 3 1 PIN 1: brown PIN 3: blue PIN 4: black 1 —— 3 —— 4 ——	4 3 1 PIN 1: brown PIN 3: blue PIN 4: black 1 —— 3 —— 4 ——	4 2 3 1 PIN 1: brown PIN 2: white PIN 3: blue PIN 4: black 1 —— 2 —— 3 —— 4 ——	4 2 3 1 PIN 1: brown PIN 2: white PIN 3: blue PIN 4: black 1 —— 2 —— 3 —— 4 ——
	60 V AC	60 V AC	30 V AC	30 V AC
	60 V DC	60 V DC	30 V DC	30 V DC
	Molded	Molded	Molded	
	3×0.34 mm²	3×0.34 mm²	4×0.34 mm²	4×0.34 mm²
	IP 67	IP 67	IP 67	IP 67
	–25...+80 °C	–25...+80 °C	–25...+80 °C	–25...+80 °C
	Normally open (NO)	Normally open (NO)	Antivalent (NO/NC) /	Antivalent (NO/NC) /
	Ordering code			
	Part number			
	BCC0C3A	**BCC0C24**	**BCC0C21**	**BCC0C20**
	BCC M313-0000-10-001-PW3334-050	BCC M323-0000-10-001-PW3334-050	BCC M314-0000-10-003-PW3434-050	BCC M324-0000-10-003-PW3434-050

Connector diagram and wiring	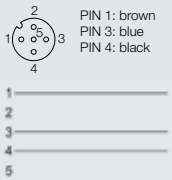	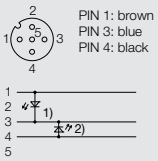	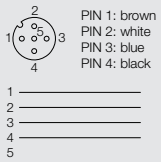	
Max. operating voltage AC U_O	250 V AC		250 V AC	
Max. operating voltage DC U_B	250 V DC	30 V DC	250 V DC	
Cable	Molded	Molded	Molded	
No. of wires × conductor cross-section	3×0.34 mm²	3×0.34 mm²	4×0.34 mm²	
Degree of protection per IEC 60529	IP 68	IP 68	IP 68	
Ambient temperature T_a	–25...+80 °C	–25...+80 °C	–25...+80 °C	
Version	Normally open (NO)	Normally open (NO)	Antivalent (NO/NC)	
LED, head translucent		green/yellow		

Cable material	Color	Length	Ordering code Part number			
PUR	orange	1.5 m				
PUR	orange	2 m	**BCC086T** BCC M425-0000-1A-001-PW3334-020	**BCC09J8** BCC M425-0000-1A-004-PW3334-020	**BCC09J6** BCC M415-0000-1A-003-PW3434-020	
PUR	orange	3 m				
PUR	orange	5 m	**BCC086U** BCC M425-0000-1A-001-PW3334-050	**BCC08MZ** BCC M425-0000-1A-004-PW3334-030	**BCC0C23** BCC M415-0000-1A-003-PW3434-050	
PUR	orange	7.5 m				
PUR	orange	10 m	**BCC086W** BCC M425-0000-1A-001-PW3334-100	**BCC08LE** BCC M425-0000-1A-004-PW3334-100		

Other cable lengths on request.
Connectors without LED are suitable for PNP and NPN switching functions.
NPN versions with LED available upon request.

	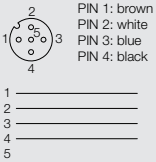	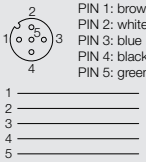	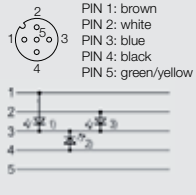	
	250 V AC	125 V AC		
	250 V DC	125 V DC	30 V DC	
	Molded	Molded	Molded	
	4×0.34 mm²	5×0.25 mm²	5×0.34 mm²	
	IP 68	IP 68	IP 68	
	–25...+80 °C	–25...+80 °C	–25...+80 °C	
	Antivalent	Antivalent	Antivalent	
	(NO/NC) ⎍ / ⎍	(NO/NC) ⎍ / ⎍	(NO/NC) ⎍ / ⎍	
			green/yellow/white	

	Ordering code			
	Part number			
		BCC087F	**BCC087L**	
		BCC M415-0000-1A-034-PW3534-015	BCC M425-0000-1A-040-PW3534-015	
	BCC0C22	**BCC087H**	**BCC087M**	
	BCC M425-0000-1A-003-PW3434-050	BCC M415-0000-1A-034-PW3534-050	BCC M425-0000-1A-040-PW3534-050	
		BCC087J	**BCC087N**	
		BCC M415-0000-1A-034-PW3534-075	BCC M425-0000-1A-040-PW3534-075	
		BCC087K	**BCC087P**	
		BCC M415-0000-1A-034-PW3534-100	BCC M425-0000-1A-040-PW3534-100	

more added value

- Lower total cost of ownership
- Full line from a single source
- Increases functional reliability

Innovation with Balluff sensor systems and connectivity

Reliable diagnostics are extremely important for highly dynamic machines. You can identify quality issues linked to the manufacturing process in real-time and take appropriate measures immediately. In the printing and paper machine industry, for example, the machine must react to faults within milliseconds.

Dynamic
Sensor
Control

Dynamic Sensor Control
Condition monitoring by Balluff

- Accurate planning
- Lower production costs
- Lower maintenance costs
- Faster access to information
- High degree of process reliability
- Optimized production
- Reliable quality

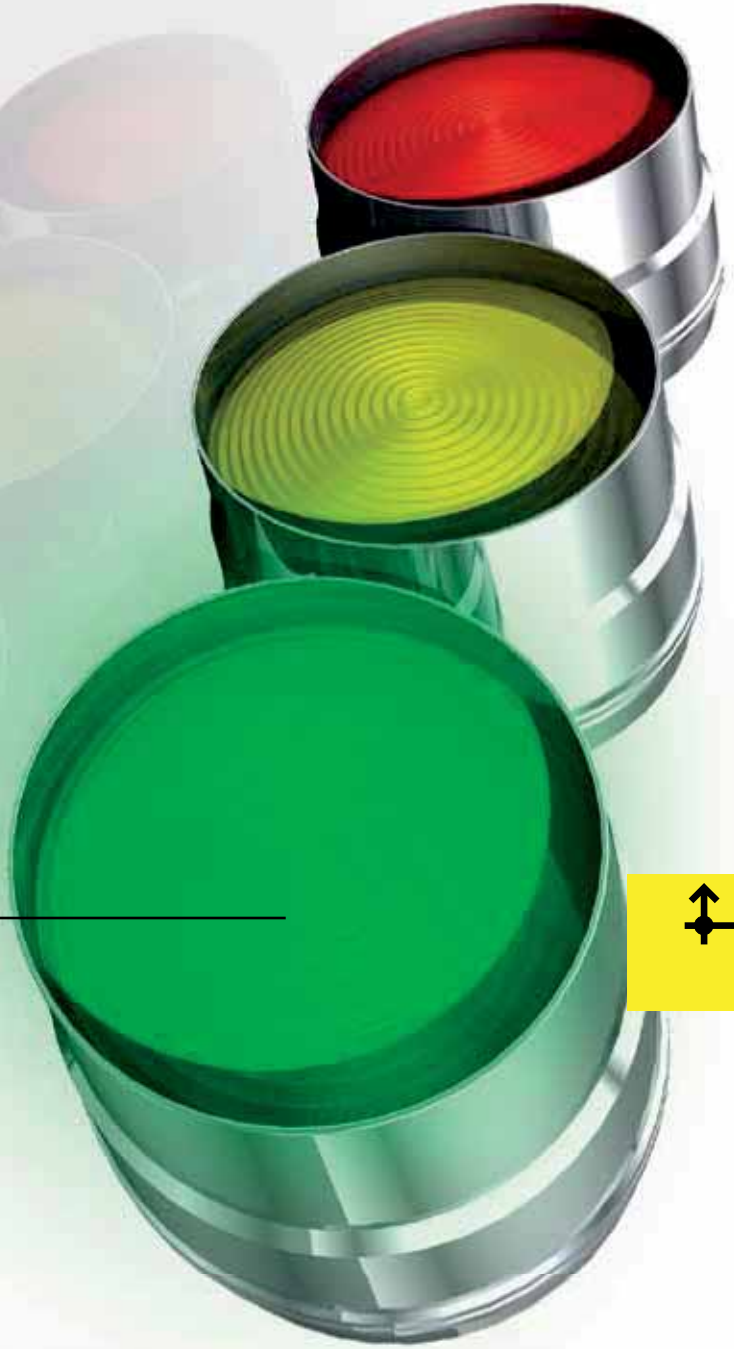

∑ Reduce your
total cost of ownership

Increase in diagnostic accuracy and functionality

Switching state | Warning message | Error message | Parameter configuration

IO-Link

- Continuous signal
- Diagnostics
- Parameter configuration

Dynamic Sensor Control

- Switching signal
- Diagnostics
- Warning messages

DESINA

- Switching signal
- Diagnostics

1/0

- Switching signal

Dynamic Sensor Control

Dynamic Sensor Control guarantees faster access to information and ensures simpler, more efficient commissioning and maintenance to increase the value of your machine concept.

Marketing and sales of machines and systems	Development and design	Assembly	Operation	Maintenance
Functional reliability	**"Condition monitoring inside"**	**Optimized commissioning**	**Increase in productivity**	**Preventive maintenance**

All benefit from Dynamic Sensor Control

more added value

This compact IO-Link master module is equipped with four IO-Link ports that allow the connection of up to 32 DSC-compatible sensors in combination with DSC sensor hubs.

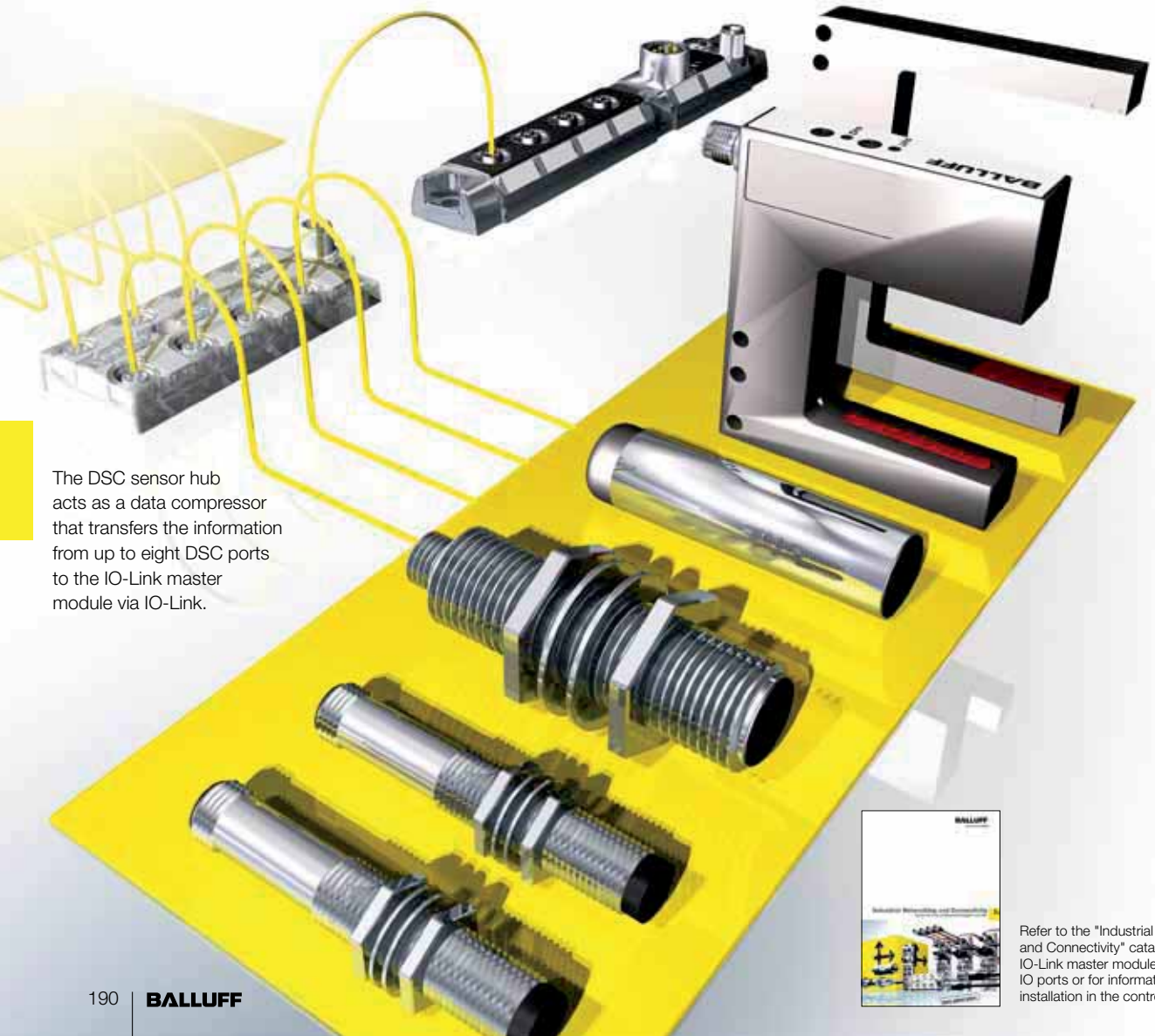

The DSC sensor hub acts as a data compressor that transfers the information from up to eight DSC ports to the IO-Link master module via IO-Link.

Refer to the "Industrial Networking and Connectivity" catalog to see other IO-Link master modules with additional IO ports or for information on installation in the control cabinet wall.

Dynamic Sensor Control

Condition monitoring by Balluff

Inductive high-end sensors	Photoelectric high-end sensors		
Target proximity >s_r 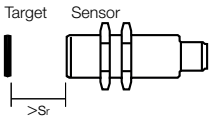	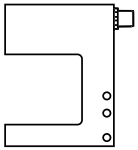	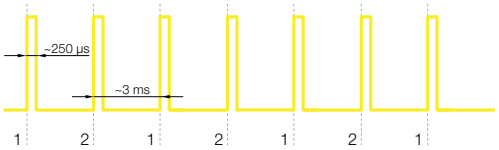	**Switching state OK** Output low
Target between s_a and s_r (typical) 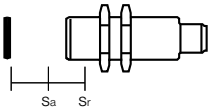 LED flashing frequency low	Lens dirty 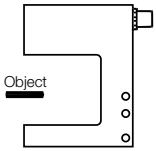	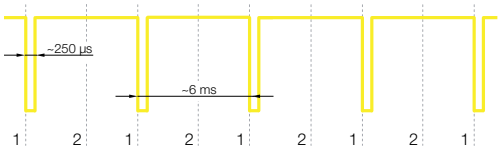	**Warning message** Output high
Target in the safe area 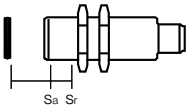 LED stable on	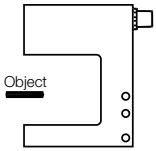	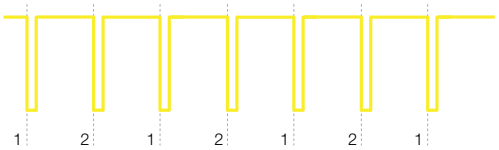	**Switching state OK** Output high
Target too close 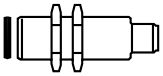 LED flashing frequency high		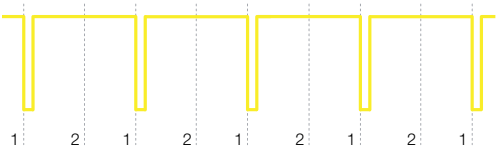	**Warning message** Output high
	Lens dirty 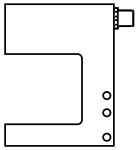	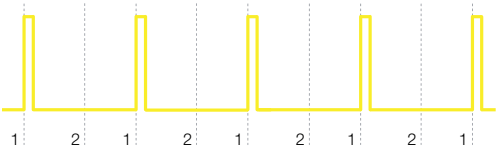	**Warning message** Output low
Sensor defective **Dynamic Sensor Control** Diagnostics from **A** to **O**	Sensor defective	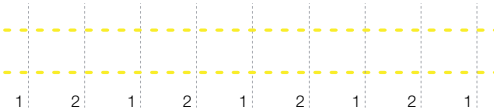 Coil break, fault in the processing electronics, output stage defective.	**Error** No pulses Output high or low

Capacitive Ø 20 mm sensor with Dynamic Sensor Control

Ordering code / Part number	BCS0001 BCS 20MG10-XPA1Y-8B-03
Switching type PNP complementary	■
Rated switching distance s_n	10 mm
Size, mounting	Ø 20 mm, flush
Operating voltage U_B	10...30 V DC
Function indicator	Yes
Degree of protection per IEC 60529	IP 63
Approvals	CE
Housing material	V2A, EP
Connection	3 m cable PUR, 3×0.25 mm²

Classic capacitive sensors

Switching state:	Target yes/no
Warning message:	–
Error message:	Sensor OK? yes/no

Inductive M12 sensors with Dynamic Sensor Control

Ordering code / Part number	BES02MC BES 113-356-SA6-S4	BES02M5 BES 113-3019-SA1-S4	BES02M8 BES 113-356-SA31-S4
Switching type PNP normally open		■	
PNP normally closed	■		■
Rated switching distance s_n	3.7 mm		4 mm
Size, mounting	M12×1, non-flush		
Operating voltage U_B	20...30 V DC		
Function indicator	No		
Degree of protection per IEC 60529	IP 67		
Approvals	CE		
Housing material	CuZn coated		
Connection	M12 connector		

Classic inductive sensors

Switching state:	Target yes/no
Warning message:	–
Error message:	Sensor OK? yes/no

Dynamic Sensor Control

Condition monitoring by Balluff

Inductive M08, M12, M18 and M30 sensors with Dynamic Sensor Control

Ordering code / Part number		BES03EN BES M08EI-PSY15B-S49G-D01	BES03EP BES M08EH-PSY25F-S49G-D01	BES03EL BES M08EI-PSY15B-S04G-D01	BES03EM BES M08EH1-PSY25F-S04G-D01	BES03ER BES M12MI-PSY20B-S04G-D01	BES03ET BES M12MH-PSY40F-S04G-D01	BES03EU BES M18MI-PSY50B-S04G-D01	BES03EW BES M18MG-PSY80F-S04G-D01	BES03EY BES M30MI-PSY10B-S04G-D01	BES03EZ BES M30MF1-PSY15F-S04G-D01
Size		M8	M8	M8	M8	M12	M12	M18	M18	M30	M30
Switching type	PNP normally open	■	■	■	■	■	■	■	■	■	■
Rated switching distance s_n		1.5 mm	2.5 mm	1.5 mm	2.5 mm	2 mm	4 mm	5 mm	8 mm	10 mm	15 mm
Mounting type	Flush	■		■		■		■		■	
	Non-flush		■		■		■		■		■
Operating voltage U_B		18...30 V DC									
Function indicator		Yes									
Degree of protection per IEC 60529		IP 67									
Approvals		CE, cULus									
Housing material		Stainless steel				CuZn coated					
Connection		M8, 3-pin		M12, 3-pin							

M8, 3-pin

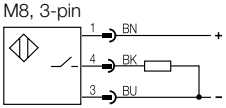

M12, 3-pin

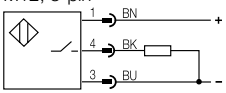

High-end inductive sensors

Switching state: Target yes/no

Warning message: Target in critical area
Function indicator flashes

Error message: Sensor OK? yes/no

more added value

BGL fork sensors with Dynamic Sensor Control

Ordering code / Part number		BGL0036 BGL 30C-009-S4	BGL003H BGL 50C-009-S4	BGL003N BGL 30A-013-S49	BGL003P BGL 50A-013-S49	BGL003R BGL 80A-013-S49
Fork sensor	1× PNP			■	■	■
	2× PNP	■	■			
Fork opening	30 mm	■		■		
	50 mm		■		■	
	80 mm					■
Light type	Red light	■	■			
	Infrared			■	■	■
Function indicator		Yes				
Repeat accuracy		≤ 0.25 mm		≤ 0.15 mm		
Connection	Connectors	M12, 4-pin		M8, 3-pin		

High-end photoelectric sensors

- Switching state: Target yes/no
- Warning message: Optical system dirty
  Function indicator flashes
- Error message: Sensor OK? yes/no

Photoelectric sensor BOS 18M Teach-In with Dynamic Sensor Control

Ordering code / Part number	BOS01CU BOS 18M-PUD-RD30-S4	BOS01CT BOS 18M-PUD-PR30-S4	BOS01CW BOS 18M-PUD-RE30-S4
Switching type PNP NC/NO selectable	■	■	■
Rated switching distance s_n	500 mm	5 m*	20 m
Size, mounting	M18		
Operating voltage U_B	10...30 V DC		
Function indicator	Yes		
Degree of protection per IEC 60529	IP 67		
Housing material	Nickel-plated brass		
Connection	M12 connector		

* based on reflector BOS R-1

High-end photoelectric sensors

- Switching state: Target yes/no
- Warning message: Optical system dirty
  Function indicator flashes
- Error message: Sensor OK? yes/no

Dynamic Sensor Control
Condition monitoring by Balluff

Fieldbus	PROFIBUS-DP
Type	4× IO-Link ports or 4 standard I/O ports
Ordering code	**BNI000Z**
Part number	BNI-PBS-507-000-Z011
Operating voltage U_B	18...30 V DC
Connection: Fieldbus	M12, B-coded
Connection: Operating voltage	7/8"
Connection: I/O ports	M12, A-coded, female
No. of I/O ports	4
Number of inputs	Max. 8
Number of outputs	Max. 8
Configurable	Yes
Max. load current sensors/channel	200 mA
Max. output load current	≤ 1.6 A
Total current $U_{Actuator}$	≤ 9 A
Total current U_{Sensor}	≤ 9 A
Degree of protection per IEC 60529	IP 67 (when connected)
Operating temperature T_a	–5...+55 °C
Storage temperature range	–25...+70 °C
Dimensions (L×W×H)	224×37×32 mm
Housing material	Nickel-plated Gd-Zn

IO-Link

No. of IO-Link ports	4× master
Operating modes (3-wire)	SIO, COM 1, COM 2, COM 3
Communication indicator	Green LED
Error indicator	Red LED
Max. load current for IO-Link device	≤ 1.6 A

IO-Link	Device
Type	8× DSC or 8× I
Ordering code	**BNI002Z**
Part number	BNI IOL-530-000-K006
Operating voltage U_B	18...30 V DC
Connection: IO-Link	M12, A-coded, male
Connection: I/O ports	M12, A-coded, female
No. of I/O ports	8
No. of DSC ports	8
No. of digital inputs	8
Max. load current sensors/channel	200 mA
Total current U_B	< 1.2 A
Degree of protection per IEC 60529	IP 67 (when connected)
Operating temperature T_a	–5...+55 °C
Storage temperature range	–25...+85 °C
Dimensions (L×W×H)	115×50×31 mm
Housing material	PC

IO-Link

Operating mode	COM 2
Parameters	– Enable/disable DSC – DSC sensitivity – Diagnostics reset – NC/NO

more added value

- No mechanical wear
- Maintenance-free
- Increased system availability
- Shorter times when replacing changeover tools
- Simplification of system design
- Simple wiring of replaceable tools

IO-Link unidirectional in 40×40 mm Unicompact housing
The IO-Link interface guarantees simple installation because the IO-Link is quickly wired. The new housing concept also reduces interfering variables.
Inductive couplers make mechanical plug-in contacts unnecessary because the signals can be reliably transmitted without contact via an air gap. This ensures not only resistance to wear but also a fast size change and high flexibility. For the Robotik coupling, IO-Link unidirectional in the compact 40×40 housing is therefore ideal.

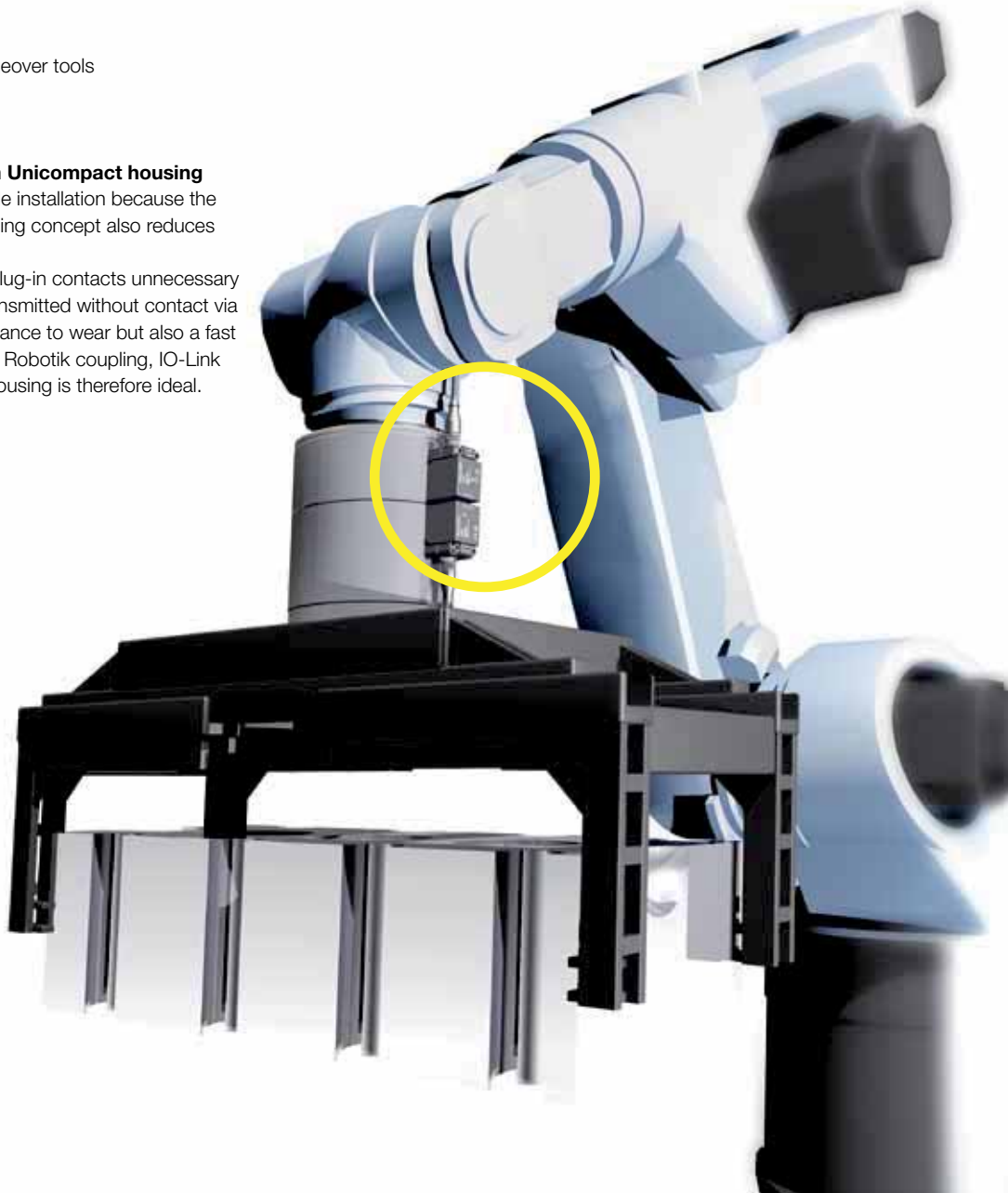

Inductive Couplers

IO-Link unidirectional in 40×40 mm Unicompact housing

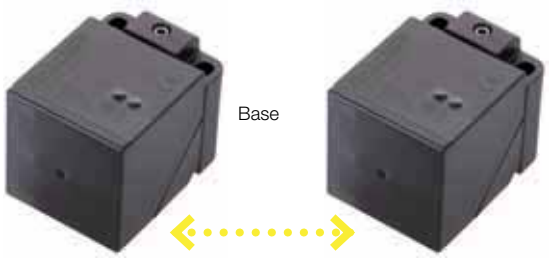

Size	**40×40×63 mm**	**40×40×63 mm**
Working range	1 mm...5 mm	1 mm...5 mm
Ordering code	**BIC005A**	**BIC005C**
Part number	BIC 1I0-I2A50-Q40KFU-SM4A4A	BIC 2I0-I2A50-Q40KFU-SM4A5A
Supply voltage U_B, including residual rippling	24 V DC ±10 %	
Rated operational current I_e	1000 mA	
No-load supply current I_0 max.	100 mA	
Max. current load per output		800 mA
Short-circuit protected	yes	yes
Remote output voltage		24 V DC ±5 %
Power supply, continuous output current		500 mA
Operational readiness		< 100 ms
Ambient temperature T_a	–5...+55 °C	–5...+55 °C
Storage temperature	–25...+70 °C	–25...+70 °C
Transmission distance	0...5 mm	0...5 mm
Function/operational voltage indicator	yes/yes	yes/yes
Weight	Approx. 160 g	Approx. 160 g
Degree of protection as per IEC 60529	IP 67	IP 67
Housing material	PBTP	PBTP
Material of sensing surface	PBTP	PBTP
Connection	M12 connector, plug 4-pin, A-coded	M12 connector, socket 5-pin, A-coded

IO-Link

Transmission rate	38.4 kbaud	38.4 kbaud
Cycle time min.	3 ms	3 ms
Process data cycle	12 ms at minimum cycle time	
IO-Link process data length	3 input bytes	3 input bytes
Frame type	1	1

more added value

- Simple connection, rapid commissioning
- Wear-free
- Robust, even in harsh environments

Robot gripper
The sensor determines whether the gripper has collected the workpiece. The switching state of the sensors is transmitted without contact.

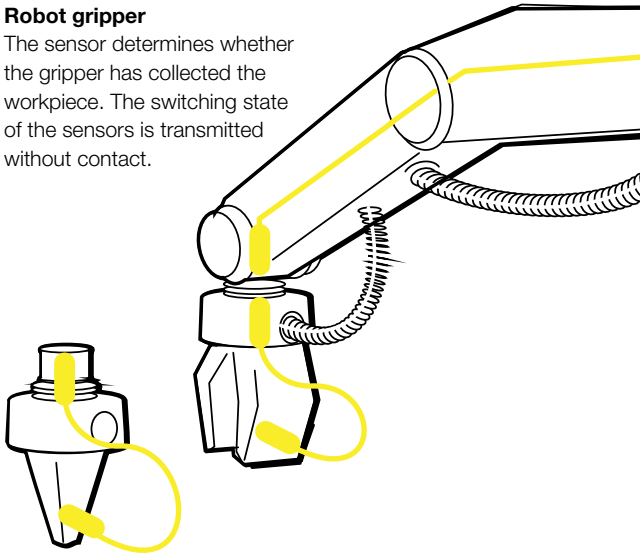

Size	
Working range	
Mounting type	
Ordering code	
Part number	
Operating voltage U_B incl. residual ripple	
Rated operating current I_e	
No-load supply current I_0 max.	
Max. current load per output	
Short-circuit protected	
Remote output voltage	
Power supply, continuous output current	
Rated insulation voltage U_i	
Operational readiness	
Ambient temperature T_a	
Storage temperature range	
Displacement	
Switching frequency f	
Function/Power indicator	
Tightening torque	
Degree of protection per IEC 60529	
Housing material	
Material of sensing face	
Connection	

Retrofitting is simple: BIC is plug-and-play. Your maintenance costs are reduced to a minimum because cable breaks and mechanical wear are a thing of the past.

Inductive Couplers
Power-only

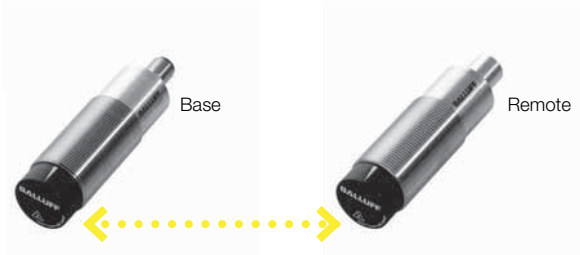

	Power-only with 0.2 A power		Power-only with 0.5 A power	
	M30×1.5	**M30×1.5**	**M30×1.5**	**M30×1.5**
	0...5 mm	**0...5 mm**	**0...5 mm**	**0...5 mm**
	Non-flush	Non-flush	Non-flush	Non-flush
	BIC0051	**BIC0052**	**BIC0007**	**BIC0008**
	BIC 1P0-P2A20-M30ME-SM4A4A	BIC 2P0-P2A20-M30ME1-SM4A5A	BIC 1P0-P2A50-M30MI3-SM4A4A	BIC 2P0-P2A50-M30MI3-SM4A5A
	24 V DC ±10 %		24 V DC ±10 %	
	max. 500 mA		max. 1 A	
	100 mA		100 mA	
	Yes	Yes	Yes	Yes
		24 V DC ±5 %		24 V DC ±5 %
		200 mA		500 mA
	150 V DC/125 V AC	150 V DC/125 V AC	150 V DC/125 V AC	150 V DC/125 V AC
		100 ms		100 ms
	–5...+55 °C	–5...+55 °C	0...+55 °C	0...+55 °C
	–25...+75 °C	–25...+75 °C	–25...+75 °C	–25...+75 °C
		±4 mm		±4 mm
	10 Hz	10 Hz	10 Hz	10 Hz
	Yes/yes	Yes/yes	Yes/yes	Yes/yes
	70 Nm	70 Nm	70 Nm	70 Nm
	IP 67	IP 67	IP 67	IP 67
	CuZn coated	CuZn coated	CuZn coated	CuZn coated
	PC	PC	PC	PC
	M12 connector, male 4-pin	M12 connector, female 5-pin	M12 connector, male 4-pin	M12 connector, female 5-pin

For more information on BIC inductive couplers, refer to our "Industrial Networking and Connectivity" catalog or visit us online at **www.balluff.com**

	Uni-standard with 0.5 A power and 8 signals	
Size	**M30×1.5**	**M30×1.5**
Working range	**0...5 mm**	**0...5 mm**
Mounting type	Non-flush	Non-flush
Ordering code	**BIC0009**	**BIC000A**
Part designation	BIC 1I3-P2A50-M30MI3-SM4ACA	BIC 2I3-P2A50-M30MI3-SM4ACA
Operating voltage U_B incl. residual ripple	24 V DC ±10 %	
Rated operating current I_e	max. 1 A	
No-load supply current I_0 max.	100 mA	
Max. current load per output	50 mA	
Short-circuit protected	Yes	Yes
Remote output voltage		24 V DC ±5 %
Power supply, continuous output current		500 mA
Rated insulation voltage U_i	150 V DC/125 V AC	150 V DC/125 V AC
Operational readiness		100 ms
Ambient temperature T_a	0...+55 °C	0...+55 °C
Storage temperature range	–25...+75 °C	–25...+75 °C
Displacement		±4 mm
Switching frequency f	40 Hz	40 Hz
Function/Power indicator	Yes/yes	Yes/yes
Tightening torque	70 Nm	70 Nm
Degree of protection per IEC 60529	IP 67	IP 67
Housing material	CuZn coated	CuZn coated
Material of sensing face	PC	PC
Connection	M12 connector, male 12-pin	M12 connector, female 12-pin

Benefit from the IO-Link interface, which allows up to 16 sensors per system and lets you connect to the bus environment

***IO-Link**	
Transmission rate	
Cycle time min.	
Process data cycle	
IO-Link process data length	
Frame type	

Inductive Couplers

Uni-Standard and IO-Link

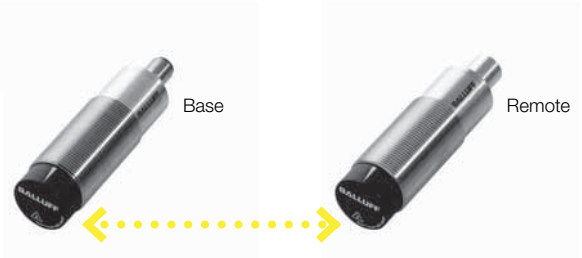

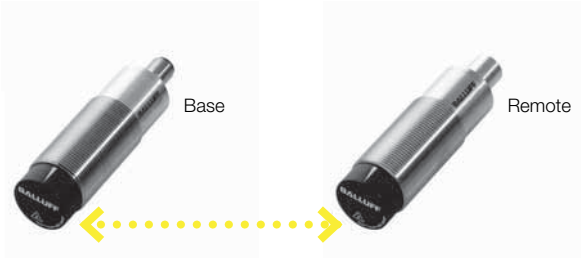

	IO-Link **interface 16 IN**		IO-Link **interface 4× analog**	
	M30×1.5	**M30×1.5**	**M30×1.5**	**M30×1.5**
	0...5 mm	**0...5 mm**	**0...5 mm**	**0...5 mm**
	Non-flush	Non-flush	Non-flush	Non-flush
	BIC000C	**BIC000E**	**BIC0053**	**BIC0054**
	BIC 1I0-I2A50-M30MI3-SM4A4A	BIC 2I0-I2A50-M30MI3-SM4A5A	BIC 1I0-IAA50-M30MI3-SM4A4A	BIC 2I0-IAA50-M30MI3-SM4A5A
	24 V DC ±10 %		24 V DC ±10 %	
	max. 1 A		max. 1 A	
	Yes	Yes	Yes	Yes
		24 V DC ±5 %		24 V DC ±5 %
		500 mA		500 mA
	150 V DC/125 V AC	150 V DC/125 V AC	150 V DC/125 V AC	150 V DC/125 V AC
	0...+55 °C	0...+55 °C	0...+55 °C	0...+55 °C
	–25...+75 °C	–25...+75 °C	–25...+75 °C	–25...+75 °C
		±4 mm		±4 mm
	IO-Link*	IO-Link*	IO-Link*	IO-Link*
	Yes/yes	Yes/yes	Yes/yes	Yes/yes
	70 Nm	70 Nm	70 Nm	70 Nm
	IP 67	IP 67	IP 67	IP 67
	CuZn coated	CuZn coated	CuZn coated	CuZn coated
	PC	PC	PC	PC
	M12 connector, male 4-pin	M12 connector, female 5-pin	M12 connector, male 4-pin	M12 connector, female 5-pin
		Together with sensor hub		**Together with analog hub**
	38,4 kbaud		38,4 kbaud	
	3 ms		3 ms	
	12 ms		33 ms	
	3 input bytes		11 input bytes	
	1		1	

more added value

Intelligent power supplies
For outstanding system availability
If you want to operate your systems and machines with maximum efficiency, the power supply you use must be reliable. Intelligent power supplies from Balluff guarantee a high degree of reliability. Wherever you install the power supply unit, you will obtain a complete picture of your environment which you can then monitor continually.

LEDs for easy monitoring
- Load level
- Stress level
- Lifetime

LEDs indicate the load level and stress level so the operator knows immediately when the unit is operating at maximum performance. The service life of the devices is also displayed, making maintenance and operation extremely easy. The operator can also see exactly when a device need replacing, which increases the overall availability of systems.

The benefits to you
- Continuous monitoring of machines and systems
- Reliable power supplies guarantee efficient operation
- Optimized use of devices and a longer service life
- Assists with maintenance planning
- Devices only replaced when necessary

Versions
Intelligent power supplies from Balluff are available in two versions

IP 20 (with screw terminal)
- With wide input voltage range from 380 to 690 V AC
- Designed for versatile use in industrial automation
- Also satisfies all wind turbine requirements

IP 67 (with connector)
- Suitable for direct use in harsh environments
- Fully enclosed housing
- High shock and vibration ratings

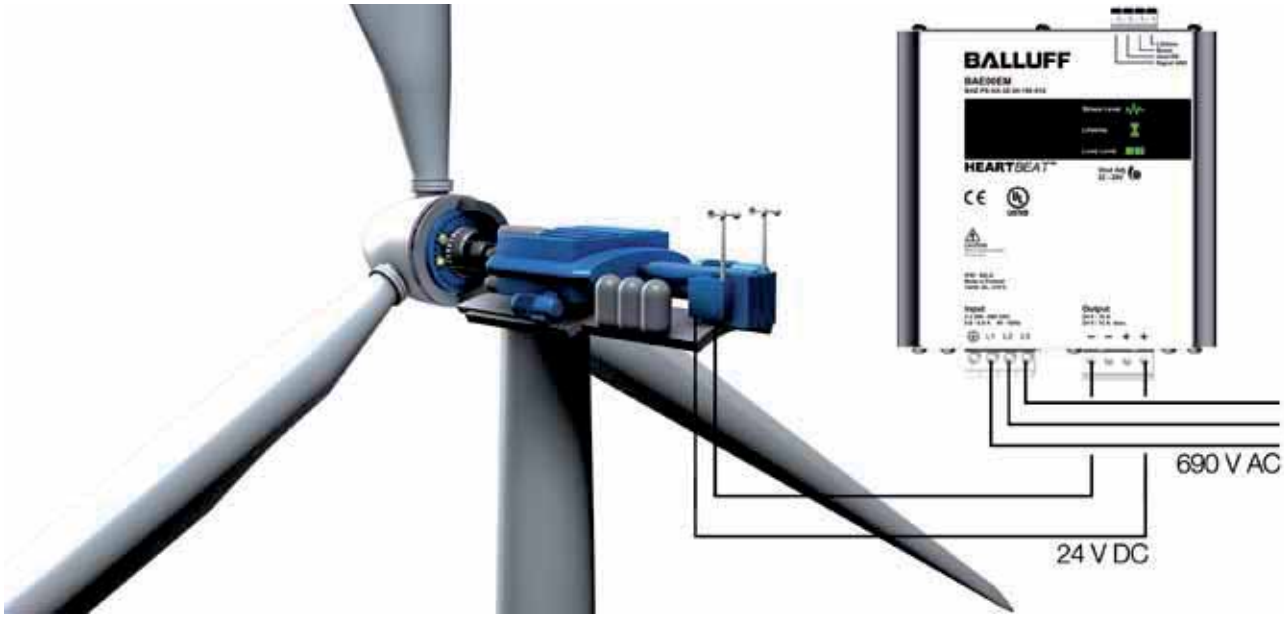

Power Supplies

Reliable power for demanding industrial automation

Load level:

Load level
Reversible in short term

Load level indicates the current load on the device. The display indicates the load without delay.

Heartbeat:

Stress level
Reversible in medium term

Stress level indicates the physical and thermal loads. A change in the load status delays the "pulse" of the device slightly.

Wear indicator:

Lifetime
Irreversible in long term

Lifetime indicates the remaining useful life of the device and is based on the combination of all loads.

All indicators multi-colored – in green, yellow or red – and show the status of the device.

more added value

Intelligent power supplies from Balluff
The autonomous installation of power supplies without switch cabinets with IP 67 protection is becoming more and more popular in industrial automation. Autonomous power supplies are already widely available but are generally difficult to access once they are installed and to further complicate matters, monitoring the operating status is practically impossible. As a result, operators rely on preventive maintenance concepts to guarantee maximum possible availability. These concepts are reliable but also expensive because devices are frequently replaced during the maintenance cycle well before the end of their service life as there is no alternative system available.

For the first time, intelligent, energy-saving power supplies from Balluff promise to remedy this situation. Their condition is visualized by means of optical indicators.

This novel concept allows detection of the condition of the device at a glance. The device follows dynamic loads and can therefore be operated at a high level of capacity utilization. Usual reserves of 30 to 50 % are therefore superfluous.

This intelligence forms the basis of a new intelligent generation of power supplies that can be permanently utilized at full capacity and provides visual information about the internal status via the:
- Load level
- Stress level
- Lifetime.

Visualization should allow the operator to view the status in the simplest way possible.

IP 67

One special feature is that the three-phase intermediate transformer that is usually installed in wind turbines can be omitted, saving money. A large input voltage range of 380...690 V allows the primary switching power supply to be connected directly to the generator voltage on the wind turbine and then operated normally.

IP 20

General key information about the IP-20 and IP-67 power supplies
- High degree of efficiency > 93 %
- Minimal heat loss and generation
- Increased efficiency of the turbine
- 3-stage status indication
- Power boost (150 % for 4 sec.)
- Extremely compact
- More efficient utilization of the power supplies
- Planned reserves are not wasted
- Prevention of unexpected failures caused by permanent overload
- Scheduled maintenance and repairs no longer necessary
- Higher productivity
- PSU only replaced at the end of its service life
- Lifetime of 15 years (at 80 % load and 40 °C), MTBF > 800,000 h
- Enclosed housing guarantees high degree of resistance to vibration and shock loads

Ideal areas of application for these intelligent power supplies include local installations in the automobile industry, machine construction, wind turbines, etc.

Power Supplies

Reliable power for demanding industrial automation

Degree of protection per IEC 60529			**IP 20**	**IP 67**
Output current			5 A and 10 A	3.8 A and 8 A
Output power			120 W and 240 W	100 W and 200 W
Output voltage			24 V DC (SELV)	24 V DC (SELV)
Input voltage			110...240 V AC/3× 380...690 V AC Single phase/three phase	100...240 V AC Single phase
10 A/240 W	Grounded output	**Ordering code**	**BAE00EM**	
Three phase	(4-pin), SELV	Part number	BAE PS-XA-3Z-24-100-012	
5 A/120 W	Grounded output	**Ordering code**	**BAE00EK**	
Single phase	(4-pin), SELV	Part number	BAE PS-XA-1W-24-050-013	
10 A/240 W	Grounded output	**Ordering code**	**BAE00EU**	
Single phase	(4-pin), SELV	Part number	BAE PS-XA-1W-24-100-014	
3.8 A/100 W	Isolated output	**Ordering code**		**BAE00EN**
Single phase	(4-pin), ODVA	Part number		BAE PS-XA-1W-24-038-601
3.8 A/100 W	Grounded output	**Ordering code**		**BAE00EP**
Single phase	(4-pin), PELV	Part number		BAE PS-XA-1W-24-038-602
3.8 A/100 W	Isolated output	**Ordering code**		**BAE00ER**
Single phase	(5-pin)	Part number		BAE PS-XA-1W-24-038-603
8A /200 W	Isolated output	**Ordering code**		**BAE00ET**
Single phase	(4-pin), ODVA	Part number		BAE PS-XA-1W-24-080-604
Efficiency			High efficiency > 93 %	High efficiency > 93 %
MTBF			> 800,000 h	> 800,000 h
Input			3-pin (screw terminal)	3-pin (male)
Output			4-pin (screw terminal) Floating alarm contacts for DC OK and service life	4-pin (female), 2 circuits Optional: 2 connectors for output voltage, each with 2 circuits 5-pin (female) for DN Network Power
Operating temperature			–25...+70 °C (single phase) –30...+70 °C (three phases)	–25...+70 °C
Storage temperature range			–40...+80 °C	–40...+80 °C
Mounting			DIN rail mounting	Panel, wall and field mounting
Housing material			Metal, partly enclosed	Metal, fully enclosed
Service life			Almost 15 years	Almost 15 years
Warranty			2 years	2 years

Accessories

Protection Cap
Mounting System
Clamp Holder
Contact Protector
Tube Switch

more added value

- Can be used for ultrasonic sensors in the M18 series
- Protects the sensing surface from mechanical load and hot weld spatter
- With a special coating and grid technology, the cooled spatter does not reach the sensing surface and drops out through an outlet

Ultrasonic sensors in welding lines
In a welding line, BUS ultrasonic sensors detect workpieces in the various steps and positions. With the use of a protection cap, the ultrasonic converter is protected from hot weld spatter.

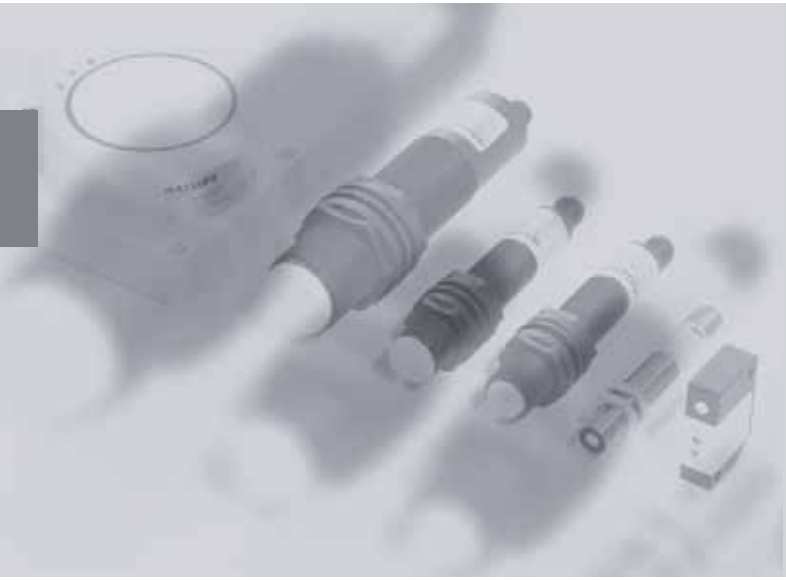

Whether position detection, distance measurement or the detection of solid, powder or liquid media independent of color, transparency and surface finish: ultrasonic sensors are precision all-rounders. Particularly when large operating ranges and high accuracies are called for, the BUS ultrasonic sensors show what they are capable of. In dusty, humid and misty working conditions, they are often the only alternative.

- Very large operating range
- For difficult environmental conditions
- Insensitive to dirt
- Object-independent distance measurement
- High resolution
- Small blind spots
- Reliable detection of the smallest of objects
- Detection of sound-absorbing materials

For additional information, see our catalog or visit our website at **www.balluff.com**

Balluff Protection Cap

For ultrasonic sensors in harsh ambient conditions

Installation note

The sensor is pushed through a bore hole and secured in the protected area using a locknut. With this type of installation, only the protection cap is exposed to the harsh ambient conditions.

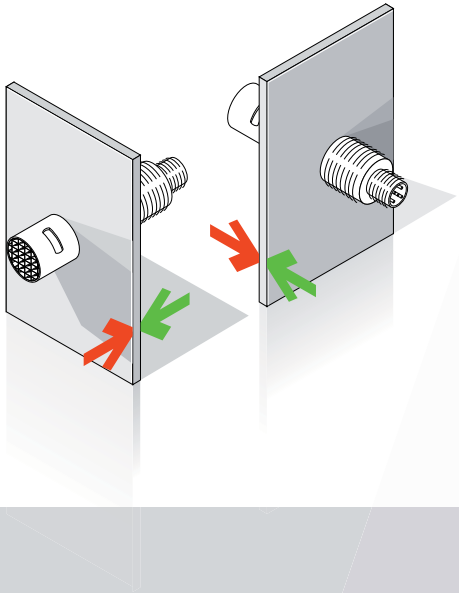

Size	**M18×1**
Version	Welding protection for M18 ultrasonic sensors BUS
Ordering code	**BAM01LJ**
Part number	BAM PC-US-007-M18-2/W
Housing material	CuBe 2-coated

Usable for ultrasonic sensors BUS M18 with a range of up to 600 mm.

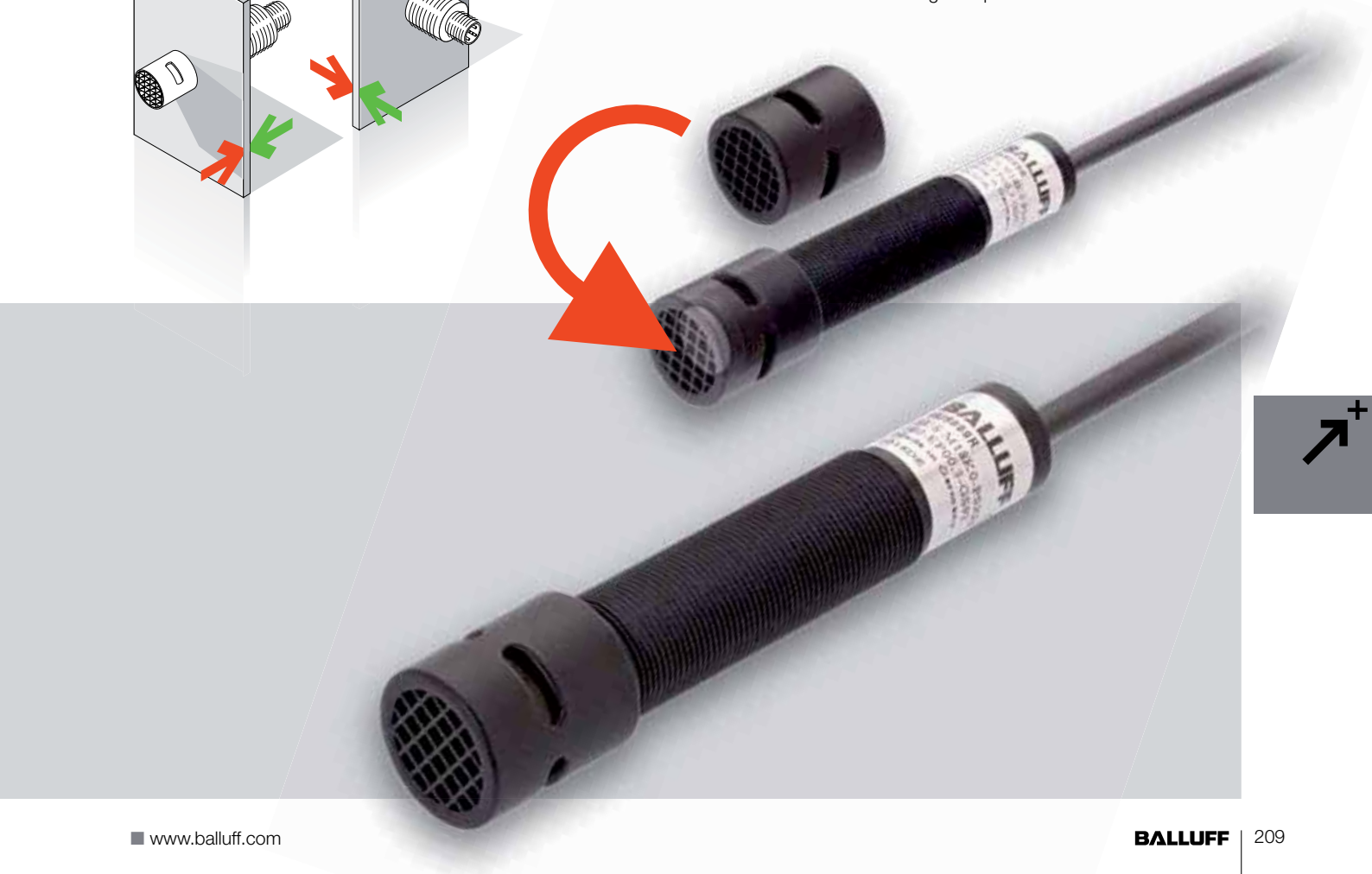

17× Standard
3× Stainless steel
10× PTFE-coated, weld-immune

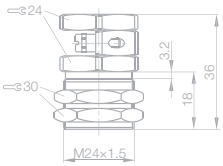

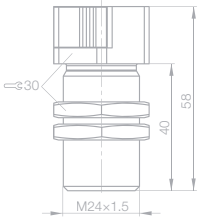

12× Standard with latch
6× Standard with latch
PTFE-coated, weld-immune
6× Stainless steel with latch
6× Stainless steel with latch
PTFE-coated, weld-immune

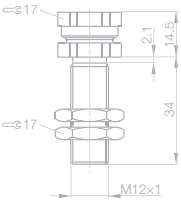

5× for installation in containers

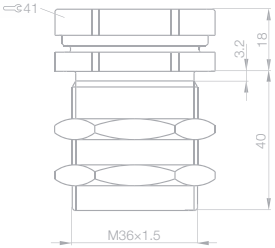

65 clamp variants!

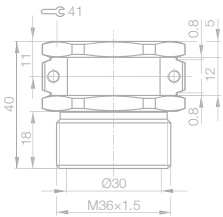

Balluff has revolutionized methods for attaching sensors with the new latch clamping principle. The sensor is inserted into the clamps and secured in position by folding over the latch. The latch can secure any sensor in all areas of the automation sector without the use of tools.

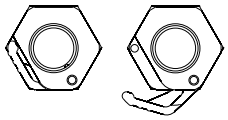

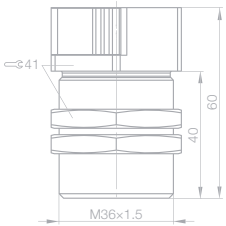

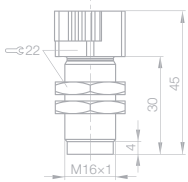

Clamp Overview

65 clamp variants

Stainless Steel

more added value

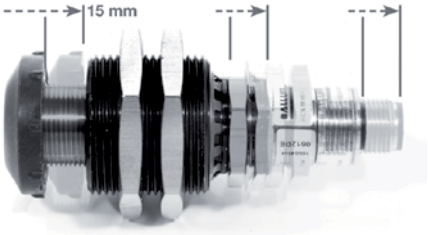

- For all areas in the automation and material handling industry
- Protects your sensors
- Increases system reliability

Description	**Contact protector**	**Contact protector**	**Contact protector**	**Contact protector**
Version	For **M8** sensors for mechanical protection	For **M12** sensors for mechanical protection	For **M18** sensors for mechanical protection	For **M30** sensors for mechanical protection
Ordering code	**BAM015U**	**BAM015W**	**BAM015Y**	**BAM015Z**
Part number	BESA 08-CM	BESA 12-CM	BESA 18-CM	BESA 30-CM
WAF	22	29	35	51
Ambient temperature range	–45...+85 °C	–45...+85 °C	–45...+85 °C	–45...+85 °C
Material	Anodized Al, POM	Anodized Al, POM	Anodized Al, POM	Anodized Al, POM

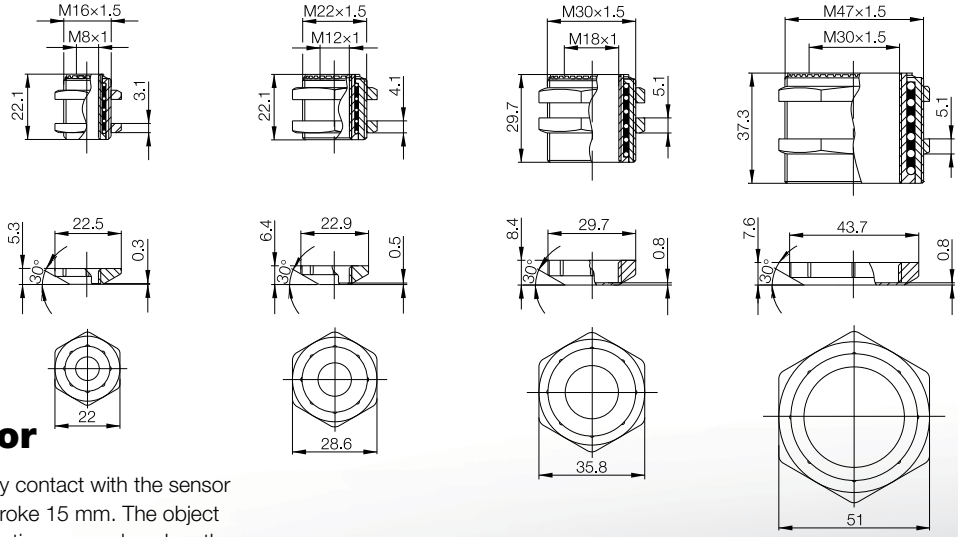

Contact protector

The contact protector absorbs any contact with the sensor while preventing damage, max. stroke 15 mm. The object runs up against an attached protective cap and pushes the sensor back, preventing damage to the sensor or the coil as a result. The contact protector ensures 100 % reliability and the previously stored sensor position is retained.

Contact Protector and Tube Switch

Reliable protection for your sensors and processes

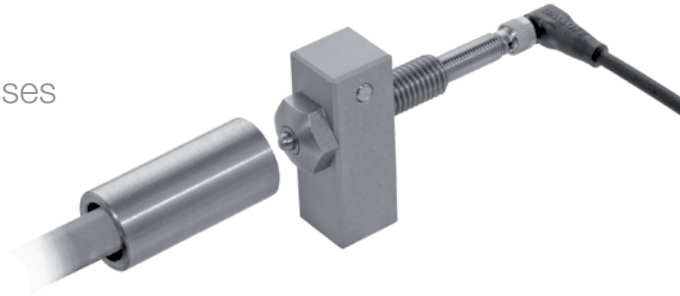

Description	**Tube switch**	**Tube switch**	**Tube switch**	**Tube switch**
Version	For sensors **dia. 4 mm** for mechanical protection	For **M5** sensors for mechanical protection	For **M5** sensors for mechanical protection	For **M8** sensors for mechanical protection
Ordering code	**BAM01C0**	**BAM01AZ**	**BAM019Y**	**BAM019W**
Part number	BAM FS-XE-002-D4-4	BAM FS-XE-001-M5-4	BAM FS-XE-003-M5-4	BAM FS-XE-004-M8-4
Spring force F (N)	3	3	3	4
Impact force $F_{max.}$ (N)	400	400	400	400
Switching operations min. (with $F_{max.}$)	500000	500000	500000	500000
Housing material	Stainless steel	Stainless steel	Stainless steel	Stainless steel

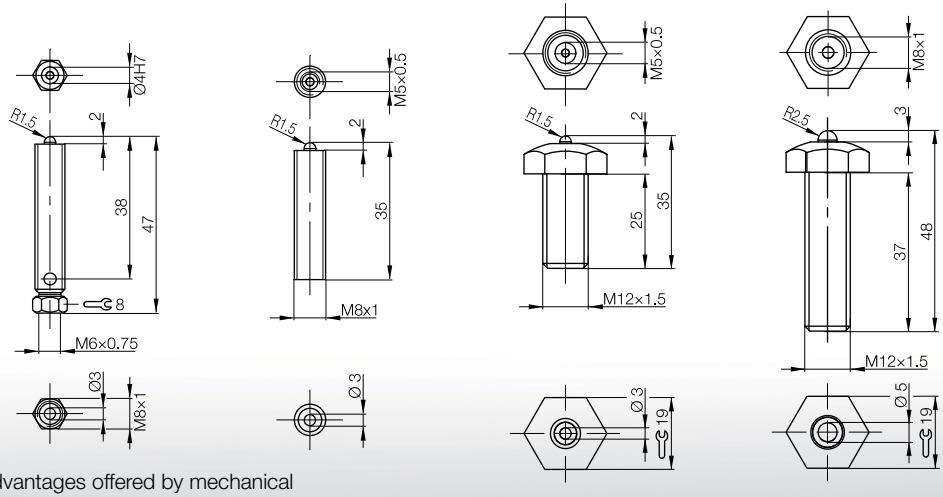

Tube switch

The tube switch combines the advantages offered by mechanical position switches and inductive sensors. Manufactured from stainless steel, it is extremely robust, very reliable even under difficult conditions and can be used immediately in any application in combination with the relevant inductive sensor.

Conception and planning
Product and application advice
Customized solutions
Targeted training

Service

The right solutions

Less time required

High application security

Significant cost reduction

STOP

Service

Customized. According to your specifications. In the best quality.

New

We give you comprehensive service over the entire life cycle of our products: including the conception and planning of your projects, testing and setup on site, and training and support. For an optimal implementation. Completely according to your wishes.

This creates the greatest possible planning security and provides faster commissioning and an earlier start of production. This leads to maximum productivity and more cost-effectiveness. And you are relieved of day-to-day tasks, so that more time remains for your really important jobs. Inform yourself in detail about our service spectrum. And benefit from a reliable partnership.

More information can be found in our service brochure.

Application advice through our TecSupport:
Discuss your technical requirements. And take advantage of our expertise.

Real-world examples:
- Selection of the correct identification procedure for an assembly line
- IO-Link concept as a cost-effective alternative to conventional wiring
- System consulting for radio frequency identification (RFID): identification of large steel pipes in adverse environments
- Recognizing multiple containers on a pallet in goods receiving

Commissioning:
Order expert knowledge. And benefit from a quick start of production.

Real-world examples:
- Setting up an optical checkpoint with the BVS vision sensor
- Consulting and support during the programming of BIS RFID systems
- Installation and commissioning of a color detection application with the BFS color sensor

Fully customized products:
Order individual versions according to your requirements: from preassembly to engineering services. And take advantage of the optimum.

Real-world examples:
- Extending the housing of a BHS high-pressure resistant inductive sensor
- Extra threads for the housing cover of a BTL micropulse travel sensor
- Customer-specific holder for a RFID data carrier
- Adaptation of the characteristics for BAW analog sensors

Workshops:
Make use of well-founded manufacturer knowledge. And benefit from application security.

- **Professional sensor use:** Select effective principles, install sensors professionally and secure the reliable operation of your application.
- **Route and distance measurement:** This is how you measure precisely and wear-free.
- **RFID:** The right data at the right time at the right place.
- **Vision sensor:** Using an image processing sensor, ensure manufacturing quality in three steps.
- **Vision sensor ident:** Reliably identify data matrix codes with an image processing sensor.
- **Industrial networking with IO-Link:** Manage signals intelligently and cost-effectively.

more added value

BALLUFF

sensors worldwide

SENSOR SOLUTIONS AND SYSTEMS

As a recognized partner in all sectors of the automation industry, Balluff offers comprehensive expertise in sensor technology and networking. We supply advanced technology and state-of-the-art electronics to our customers, who benefit from excellent service, application-specific solutions and individual consultation. You too can benefit from the excellent quality of our products and services.

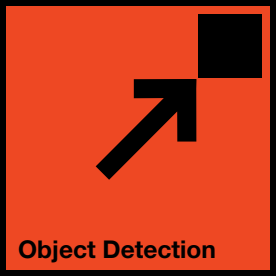

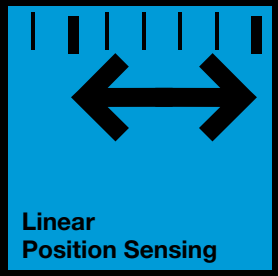

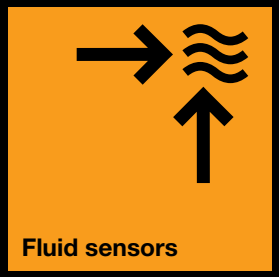

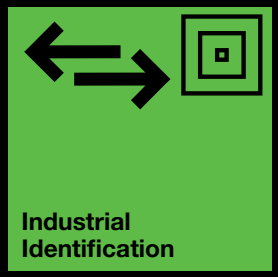

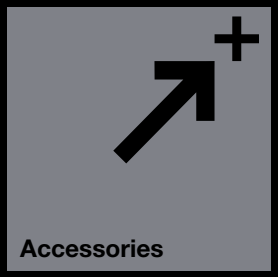

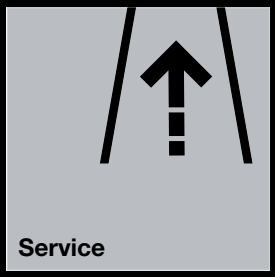

www.balluff.com
Phone +49 7158 173-0

BALLUFF

sensors worldwide

- Object Detection
- Linear Position Sensing
- Fluid Sensors
- Industrial Identification
- Industrial Networking and Connectivity
- Accessories
- Service

Balluff GmbH
Schurwaldstrasse 9
73765 Neuhausen a.d.F.
Germany
Tel. +49 7158 173-0
Fax +49 7158 5010
balluff@balluff.de

www.balluff.com

Doc. no. 871424/Mat. no. 181688 E · Edition 1204; Subject to changes. Replaces edition 1110.